User Manual
SKU: ABX00087



Description

The Arduino® UNO R4 WiFi is the first UNO board to feature a 32-bit microcontroller and an ESP32-S3 Wi-Fi® module (ESP32-S3-MINI-1-N8). It features a RA4M1 series microcontroller from Renesas (R7FA4M1AB3CFM#AA0), based on a 48 MHz Arm® Cortex®-M4 microprocessor. The UNO R4 WiFi's memory is larger than its predecessors, with 256 kB flash, 32 kB SRAM and 8 kB of EEPROM.

The RA4M1's operating voltage is fixed at 5 V, whereas the ESP32-S3 module is 3.3 V. Communication between these two MCUs is performed via a logic-level translator (TXB0108DQSR).

Target areas:

Maker, beginner, education

Features

The **R7FA4M1AB3CFM#AA0**, often referred to as RA4M1 in this datasheet, is the main MCU on the UNO R4 WiFi, connected to all pin headers on the board as well as all communication buses.

- **Overview**
  - 48 MHz Arm® Cortex®-M4 microprocessor with a floating point unit (FPU)
  - 5 V operating voltage
  - Real-time Clock (RTC)
  - Memory Protection Unit (MPU)
  - Digital-to-analog Converter (DAC)
- **Memory**
  - 256 kB Flash Memory
  - 32 kB SRAM
  - 8 kB Data Memory (EEPROM)
- **Peripherals**
  - Capacitive Touch Sensing Unit (CTSU)
  - USB 2.0 Full-Speed Module (USBFS)
  - 14-bit ADC
  - Up to 12-bit DAC
  - Operational Amplifier (OPAMP)
- **Power**
  - Operating voltage for RA4M1 is 5 V
  - Recommended input voltage (VIN) is 6-24 V
  - Barrel jack connected to VIN pin (6-24 V)
  - Power via USB-C® at 5 V
- **Communication**
  - 1x UART (pin D0, D1)
  - 1x SPI (pin D10-D13, ICSP header)
  - 2x I2C (pin A4, A5, SDA, SCL), (Qwiic connector)
  - 1x CAN (pin D4, D5, external transceiver is required)

See the full datasheet for the R7FA4M1AB3CFM#AA0 in the link below:

- R7FA4M1AB3CFM#AA0 datasheet

The **ESP32-S3-MINI-1-N8** is the secondary MCU with a built-in antenna for Wi-Fi® & Bluetooth® connectivity. This module operates on 3.3 V and communicates with the RA4M1 using a logic-level translator (TXB0108DQSR).

- **Overview**
  - Xtensa® dual-core 32-bit LX7 microprocessor
  - 3.3 V operating voltage
  - 40 MHz crystal oscillator

- **Wi-Fi®**
  - Wi-Fi® support with 802.11 b/g/n standard (Wi-Fi® 4)
  - Bit rate at up to 150 Mbps
  - 2.4 GHz band
- **Bluetooth®**
  - Bluetooth® 5

See the full datasheet for the ESP32-S3-MINI-1-N8 in the link below:

- ESP32-S3-MINI-1-N8 datasheet

CONTENTS

1 The Board **7**
1.1 Application Examples 7
1.2 Related Products 7
2 Recommended Operating Conditions **8**
3 Block Diagram **8**
4 Board Topology **9**
4.1 Front View 9
5 Microcontroller (R7FA4M1AB3CFM#AA0) **10**
6 Wi-Fi® / Bluetooth® Module (ESP32-S3-MINI-1-N8) **10**
6.1 ESP Header 11
6.2 USB Bridge 12
7 USB Connector **13**
8 LED Matrix **13**
9 Digital Analog Converter (DAC) **14**
10 Qwiic I2C Connector **15**
11 Power Options **16**
11.1 Power Tree 16
11.2 Pin Voltage 17
11.3 Pin Current 17
12 Pinout **18**
12.1 Analog 19
12.2 Digital 19
12.3 OFF 20
12.4 ICSP 20
13 Mounting Holes And Board Outline **20**
14 Board Operation **21**
14.1 Getting Started - IDE 21
14.2 Getting Started - Arduino Cloud Editor 21
14.3 Getting Started - Arduino Cloud 21
14.4 Online Resources 21
14.5 Board Recovery 21
15 Declaration of Conformity CE DoC (EU) **22**
16 Declaration of Conformity to EU RoHS & REACH 211 01/19/2021

17 Conflict Minerals Declaration 23

18 FCC Caution 23

19 SRRC 24

20 Company Information 24

21 Reference Documentation 25

22 Change Log 25

23 开发板

23.1 应用示例

23.1.1 相关产品

24 建议的运行条件

25 方框图

26 板卡拓扑

26.1 正视图

27 微控制器 (R7FA4M1AB3CFM#AA0)

28 Wi-Fi® / 蓝牙® 模块（ESP32-S3-MINI-1-N8）

28.1 ESP 针脚

28.2 USB 桥

29 USB 连接器

30 LED 矩阵

31 数字模拟转换器 (DAC)

32 I2C 连接器

33 电源选项

33.1 电源树

33.2 引脚电压

33.3 引脚电流

34 引脚

34.1 模拟

34.2 数字

34.3 关闭

34.4 ICSP 41

35 安装孔和开发板轮廓

36 开发板操作

36.1 入门 - IDE

36.2 入门 - Arduino Cloud Editor

36.3 入门 - Arduino Cloud

36.4 在线资源

36.5 开发板恢复

37 符合性声明 CE DoC（EU）

38 符合性声明 EU RoHS & REACH 211 01/19/2021

39 冲突矿物声明

40 FCC 注意事项

41 SRRC **45**

42 公司信息

43 参考文件

44 更改日志

1 The Board

1.1 Application Examples

The UNO R4 WiFi is part of the first UNO series of 32-bit development boards, being previously based on 8-bit AVR microcontrollers. There are thousands of guides, tutorials and books written about the UNO board, where the UNO R4 WiFi continues its legacy.

The board features 14 digital I/O ports, 6 analog channels, dedicated pins for I2C, SPI and UART connections. It has a significantly larger memory: 8 times more flash memory (256 kB) and 16 times more SRAM (32 kB). With a 48 MHz clock speed, it is also 3x faster than its predecessors.

In addition, it features an ESP32-S3 module for Wi-Fi® & Bluetooth® connectivity, as well as a built-in 12x8 LED matrix, making it one of the most visually unique Arduino boards to date. The LED matrix is fully programmable, where you can load anything from still frames to custom animations.

Entry-level projects: If this is your first project within coding and electronics, the UNO R4 WiFi is a good fit. It is easy to get started with, and it has a lot of online documentation.

Easy IoT applications: build projects without writing any networking code in the Arduino Cloud. Monitor your board, connect it with other boards and services, and develop cool IoT projects.

LED Matrix: the 12x8 LED matrix on the board can be used for showing animations, text scrolling, create mini-games and much more, being the perfect feature to give your project more personality.

1.2 Related Products

- UNO R3
- UNO R3 SMD
- UNO R4 Minima

Rating

2 Recommended Operating Conditions

Symbol	Description	Min	Typ	Max	Unit
V_{IN}	Input voltage from VIN pad / DC Jack	6	7.0	24	V
V_{USB}	Input voltage from USB connector	4.8	5.0	5.5	V
T_{OP}	Operating Temperature	-40	25	85	°C

Note: V_{DD} controls the logic level and is connected to the 5V power rail. V_{AREF} is for the analog logic.

Functional Overview

3 Block Diagram

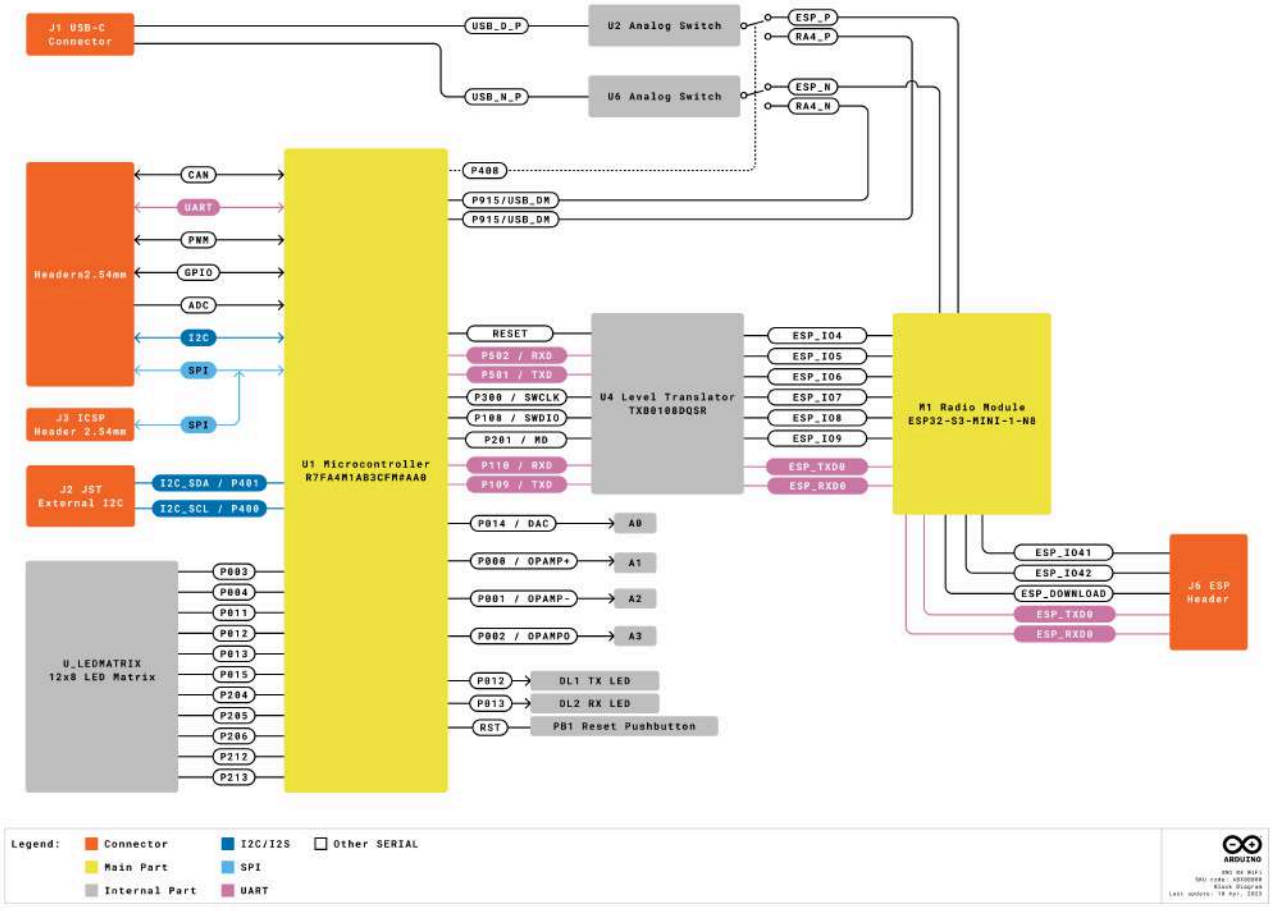

Arduino UNO R4 WiFi Block Diagram

4 Board Topology

4.1 Front View

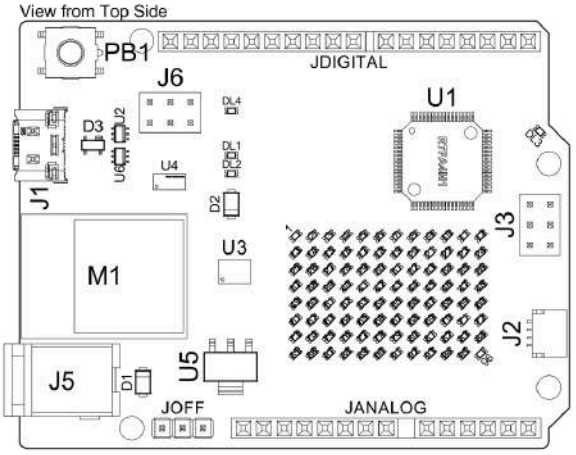

Top View of Arduino UNO R4 WiFi

Ref.	Description
U1	R7FA4M1AB3CFM#AA0 Microcontroller IC
U2	NLASB3157DFT2G Multiplexer
U3	ISL854102FRZ-T Buck Converter
U4	TXB0108DQSR logic level translator (5 V - 3.3 V)
U5	SGM2205-3.3XKC3G/TR 3.3 V linear regulator
U6	NLASB3157DFT2G Multiplexer
U_LEDMATRIX	12x8 LED Red Matrix
M1	ESP32-S3-MINI-1-N8
PB1	RESET Button
JANALOG	Analog input/output headers
JDIGITAL	Digital input/output headers
JOFF	OFF, VRTC header
J1	CX90B-16P USB-C® connector
J2	Qwiic Connector for I2C communication protocol
J3	ICSP header (SPI)
J5	DC Jack
J6	ESP header
DL1	LED TX (serial transmit)

Ref.	Description
DL2	LED RX (serial receive)
DL3	LED Power (green)
DL4	LED SCK (serial clock)
D1	PMEG6020AELRX Schottky Diode
D2	PMEG6020AELRX Schottky Diode
D3	PRTR5V0U2X,215 ESD Protection

5 Microcontroller (R7FA4M1AB3CFM#AA0)

The UNO R4 WiFi is based on the 32-bit RA4M1 series microcontroller, **R7FA4M1AB3CFM#AA0**, from Renesas, which uses a 48 MHz Arm® Cortex®-M4 microprocessor with a floating point unit (FPU).

The operating voltage for the RA4M1 is fixed at 5 V as to be hardware compatible with shields, accessories & circuits based on previous Arduino UNO boards.

The R7FA4M1AB3CFM#AA0 features:

- 256 kB flash / 32 kB SRAM / 8 kB data flash (EEPROM)
- Real-time Clock (RTC)
- 4x Direct Memory Access Controller (DMAC)
- 14-bit ADC
- Up to 12-bit DAC
- OPAMP
- CAN bus

For more technical details on this microcontroller, visit the Renesas - RA4M1 series official documentation.

6 Wi-Fi® / Bluetooth® Module (ESP32-S3-MINI-1-N8)

The Wi-Fi® / Bluetooth® LE module on the UNO R4 WiFi is from the ESP32-S3 SoCs. It features the Xtensa® dual-core 32-bit LX7 MCU, a built-in antenna and support for 2.4 GHz bands.

The ESP32-S3-MINI-1-N8 features:

- Wi-Fi® 4 - 2.4 GHz band
- Bluetooth® 5 LE support
- 3.3 V operating voltage
- 384 kB ROM
- 512 kB SRAM
- Up to 150 Mbps bit rate

This module acts as a secondary MCU on the UNO R4 WiFi, and communicates with the RA4M1 MCU using a logic-level translator. Note that this module operates on 3.3 V as opposed to the RA4M1's 5 V operating voltage.

6.1 ESP Header

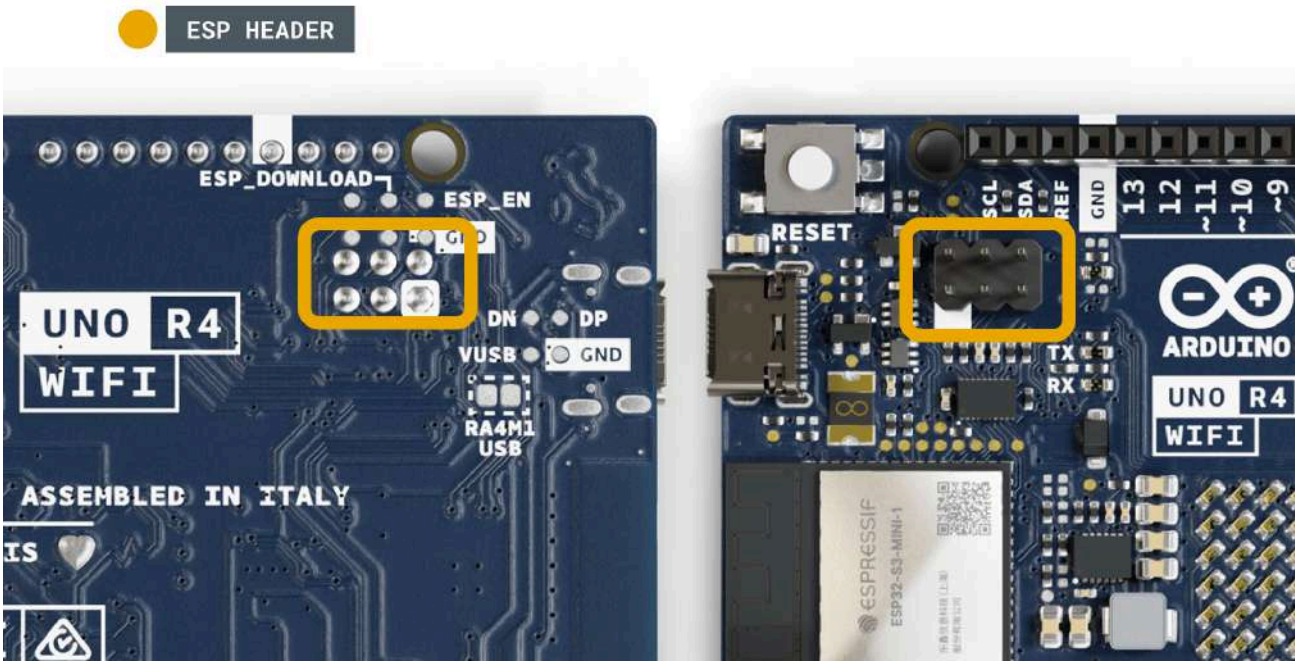

ESP header.

The header located close to the RESET button can be used to access the ESP32-S3 module directly. The pins accessible are:

- `ESP_IO42` - MTMS debugging (Pin 1)
- `ESP_IO41` - MTDI debugging (Pin 2)
- `ESP_TXD0` - Serial Transmit (UART) (Pin 3)
- `ESP_DOWNLOAD` - boot (Pin 4)
- `ESP_RXD0` - Serial Receive (UART) (Pin 5)
- `GND` - ground (Pin 6)

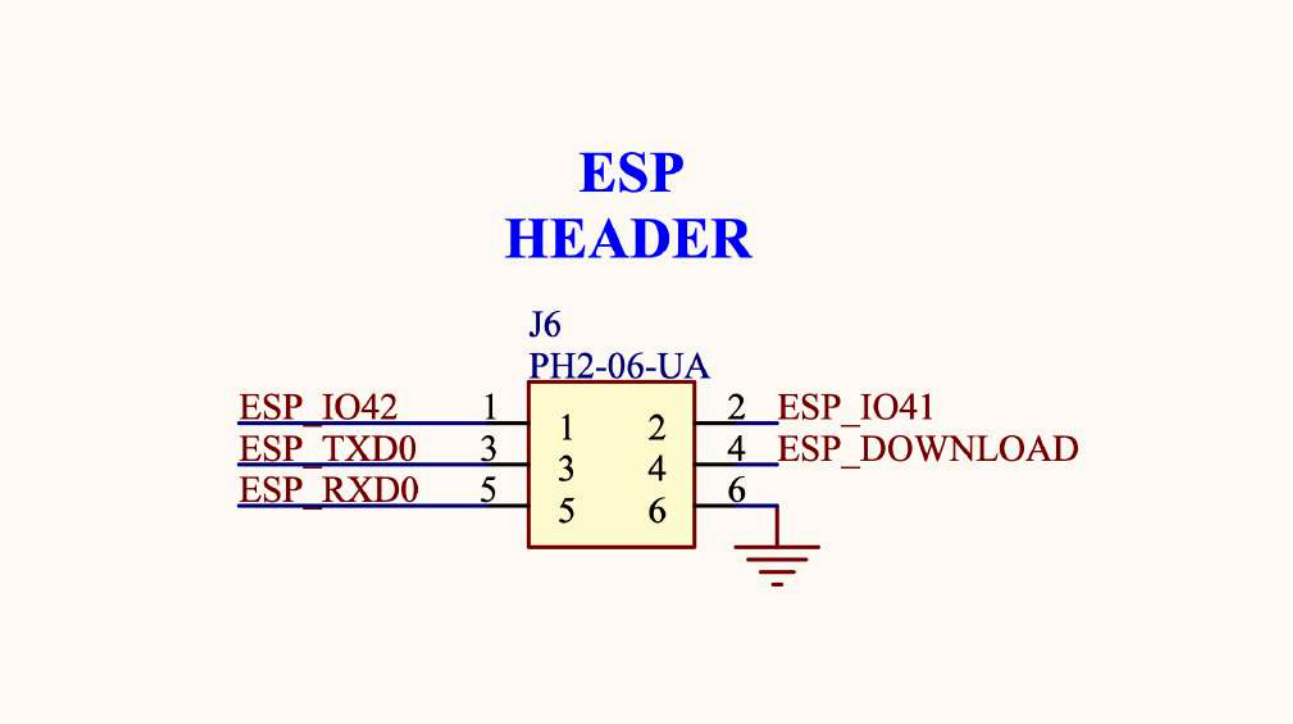

ESP header (schematic)

6.2 USB Bridge

When programming the UNO R4 WiFi, the RA4M1 MCU is programmed via the ESP32-S3 module by default. The **U2** and **U6** switches can switch the USB communication to go directly to the RA4M1 MCU, by writing a high state to the P408 pin (D40).

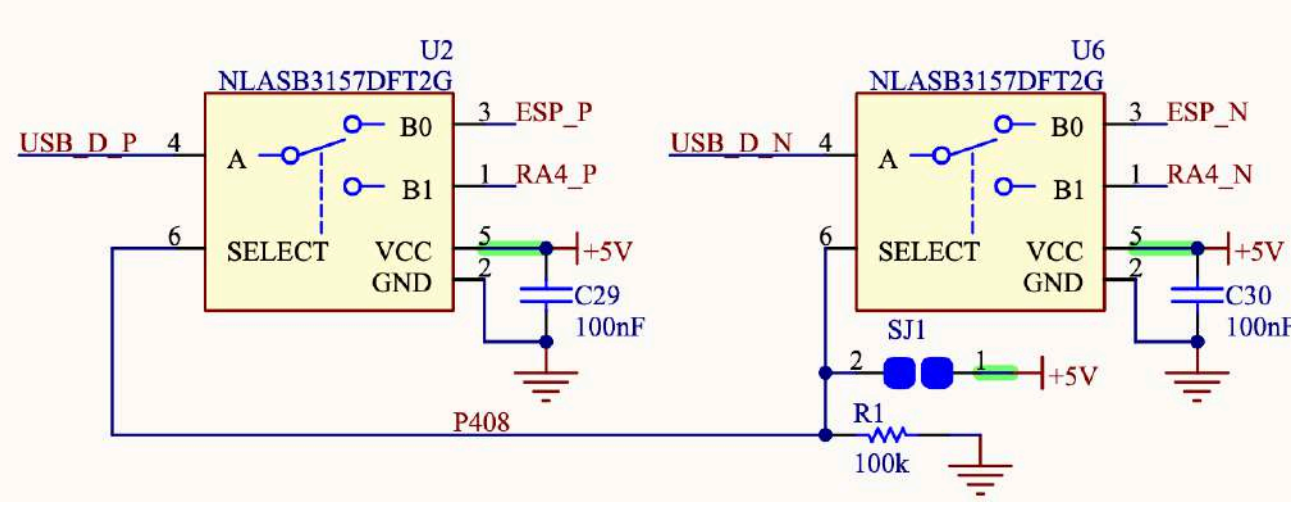

Soldering together the **SJ1** pads permanently sets the USB communication directly to the RA4M1, bypassing the ESP32-S3.

7 USB Connector

The UNO R4 WiFi has one USB-C® port, used to power and program your board as well as sending & receiving serial communication.

Note: The board should not be powered with more than 5 V via the USB-C® port.

8 LED Matrix

The UNO R4 WiFi features a 12x8 matrix of red LEDs (**U_LEDMATRIX**), connected using the technique known as charlieplexing.

The following pins on the RA4M1 MCU are used for the matrix:

- P003
- P004
- P011
- P012
- P013
- P015
- P204
- P205
- P206
- P212
- P213

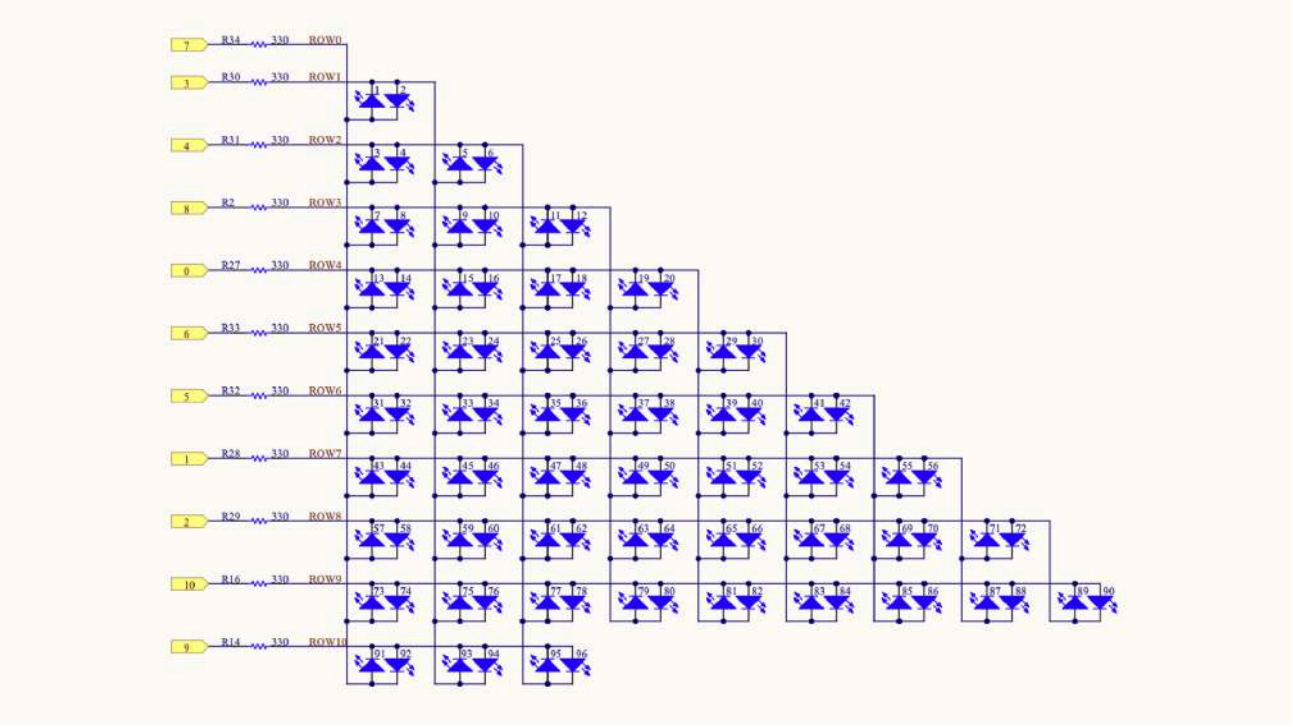

LED matrix schematics.

These LEDs can be accessed as an array, using a specific library. See the mapping below:

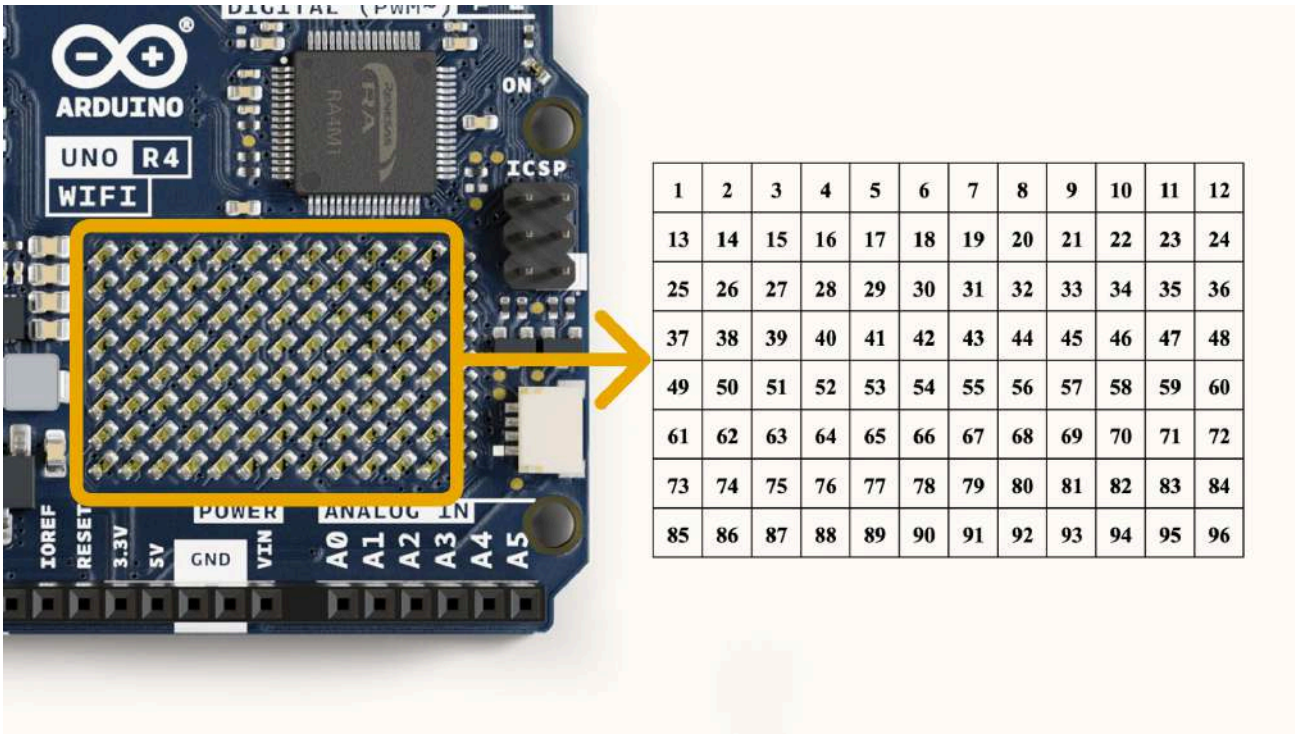

1	2	3	4	5	6	7	8	9	10	11	12
13	14	15	16	17	18	19	20	21	22	23	24
25	26	27	28	29	30	31	32	33	34	35	36
37	38	39	40	41	42	43	44	45	46	47	48
49	50	51	52	53	54	55	56	57	58	59	60
61	62	63	64	65	66	67	68	69	70	71	72
73	74	75	76	77	78	79	80	81	82	83	84
85	86	87	88	89	90	91	92	93	94	95	96

LED matrix number mapping.

This matrix can be used for a number of projects and prototyping purposes, and supports animation, simple game designs and scrolling text among other things.

9 Digital Analog Converter (DAC)

The UNO R4 WiFi has a DAC with up to 12-bit resolution attached to the A0 analog pin. A DAC is used to convert a digital signal to an analog signal.

The DAC can be used for signal generation for e.g. audio applications, like generating and altering sawtooth waves.

10 Qwiic I2C Connector

The I2C Qwiic connector SM04B-SRSS-TB(LF)(SN) is connected to a secondary I2C bus (I2C0) on the board. This connector is powered via 3.3 V following the Qwiic standard system and makes the board compatible with the Arduino Modulino nodes.

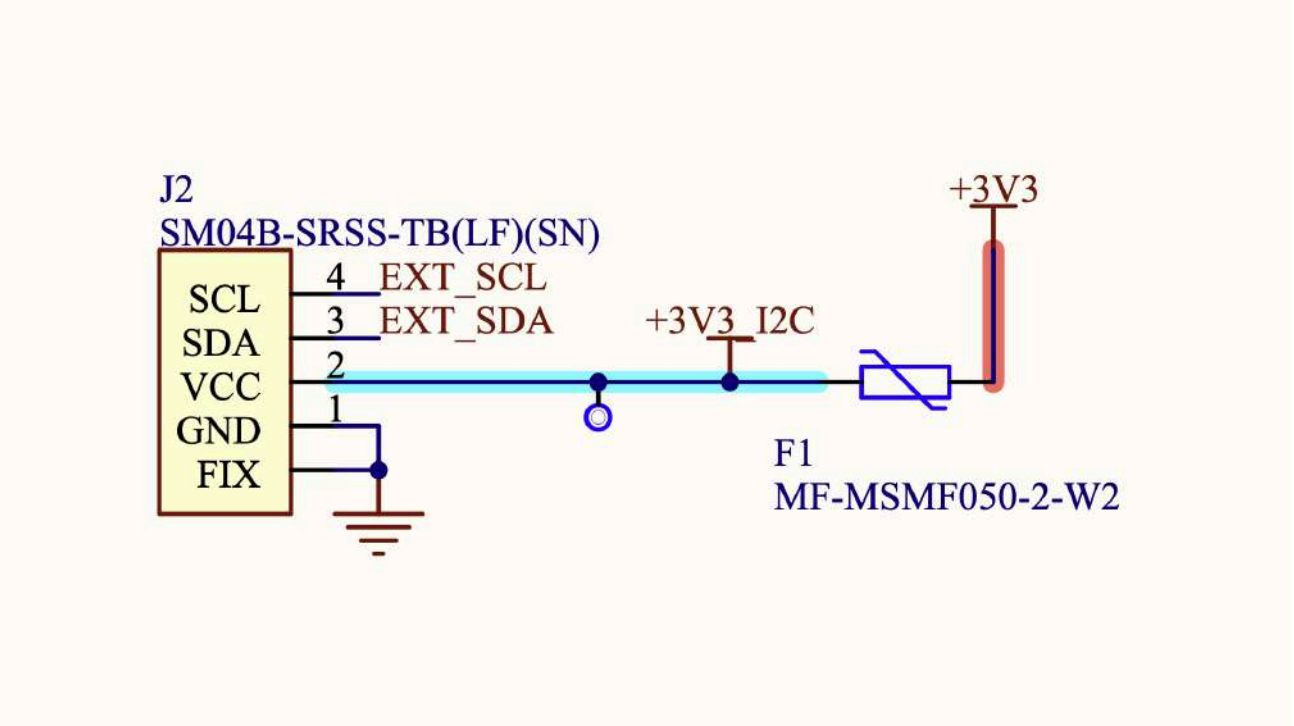

I2C Qwiic connector.

Note: The Qwiic I2C bus object is `Wire1` and the standard I2C bus object is `Wire`.

The standard I2C is accessible through the following pin connections:

JANALOG header

- A4
- A5

JDIGITAL header

- SDA
- SCL

> A4 and A5 are connected to the main I2C bus, these pins should not be used as ADC inputs whenever the bus is in use. You can however connect I2C devices to each of these pins and connectors simultaneously.

11 Power Options

Power can either be supplied via the VIN pin, or via USB-C® connector. If power is supplied via VIN, the ISL854102FRZ buck converter steps the voltage down to 5 V.

Both VUSB and VIN pins are connected to the ISL854102FRZ buck converter, with Schottky diodes in place for reverse polarity & overvoltage protection respectively.

Power via USB supplies about ~4.7 V (due to Schottky drop) to the RA4M1 MCU.

The linear regulator (SGM2205-3.3XKC3G/TR) converts 5 V from either the buck converter or USB, and provides 3.3 V to a number of components, including the ESP32-S3 module.

11.1 Power Tree

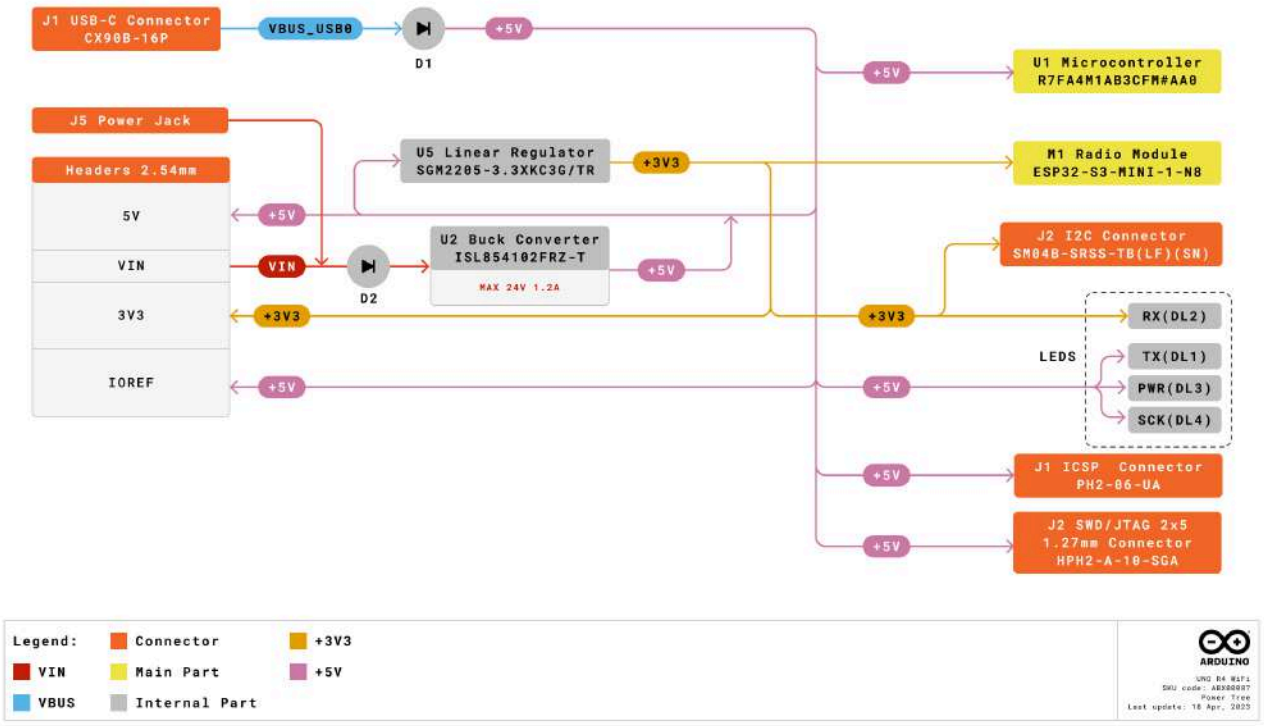

Arduino UNO R4 WiFi power tree.

11.2 Pin Voltage

The general operating voltage for UNO R4 WiFi is 5 V, however the ESP32-S3 module's operating voltage is 3.3 V.

Note: It is **very** important that ESP32-S3's pins (3.3 V) do not come in contact with any of the RA4M1's pins (5 V), as this may damage the circuits.

11.3 Pin Current

The GPIOs on the R7FA4M1AB3CFM#AA0 microcontroller can safely handle up to 8 mA of current. Never connect devices that draw higher current directly to a GPIO as this may damage the circuit.

For powering e.g. servo motors, always use an external power supply.

Mechanical Information

12 Pinout

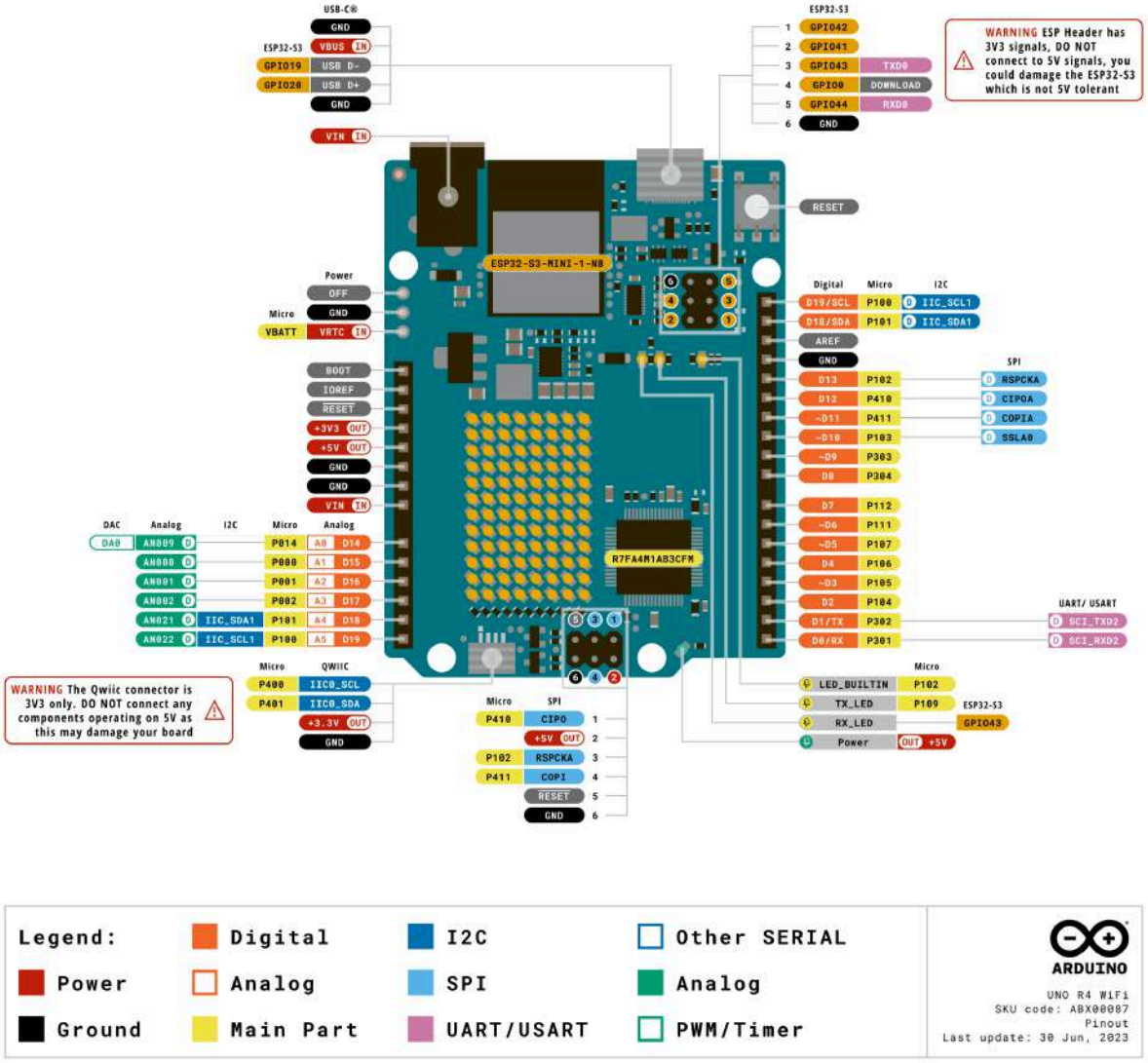

Pinout for UNO R4 WiFi.

12.1 Analog

Pin	Function	Type	Description
1	BOOT	Mode	Mode selection
2	IOREF	IOREF	Reference for digital logic V - connected to 5 V
3	Reset	Reset	Reset
4	+3V3	Power	+3V3 Power Rail
5	+5V	Power	+5V Power Rail
6	GND	Power	Ground
7	GND	Power	Ground
8	VIN	Power	Voltage Input
9	A0	Analog	Analog input 0 / DAC
10	A1	Analog	Analog input 1 / OPAMP+
11	A2	Analog	Analog input 2 / OPAMP-
12	A3	Analog	Analog input 3 / OPAMPOut
13	A4	Analog	Analog input 4 / I2C Serial Datal (SDA)
14	A5	Analog	Analog input 5 / I2C Serial Clock (SCL)

12.2 Digital

Pin	Function	Type	Description
1	SCL	Digital	I2C Serial Clock (SCL)
2	SDA	Digital	I2C Serial Datal (SDA)
3	AREF	Digital	Analog Reference Voltage
4	GND	Power	Ground
5	D13/SCK/CANRX0	Digital	GPIO 13 / SPI Clock / CAN Receiver (RX)
6	D12/CIPO	Digital	GPIO 12 / SPI Controller In Peripheral Out
7	D11/COPI	Digital	GPIO 11 (PWM) / SPI Controller Out Peripheral In
8	D10/CS/CANTX0	Digital	GPIO 10 (PWM) / SPI Chip Select / CAN Transmitter (TX)
9	D9	Digital	GPIO 9 (PWM~)
10	D8	Digital	GPIO 8
11	D7	Digital	GPIO 7
12	D6	Digital	GPIO 6 (PWM~)
13	D5	Digital	GPIO 5 (PWM~)
14	D4	Digital	GPIO 4
15	D3	Digital	GPIO 3 (PWM~) / Interrupt Pin
16	D2	Digital	GPIO 2 / Interrupt Pin
17	D1/TX0	Digital	GPIO 1 / Serial 0 Transmitter (TX)
18	D0/TX0	Digital	GPIO 0 / Serial 0 Receiver (RX)

12.3 OFF

Pin	Function	Type	Description
1	OFF	Power	For controlling power supply
2	GND	Power	Ground
1	VRTC	Power	Battery connection to power RTC only

12.4 ICSP

Pin	Function	Type	Description
1	CIPO	Internal	Controller In Peripheral Out
2	+5V	Internal	Power Supply of 5 V
3	SCK	Internal	Serial Clock
4	COPI	Internal	Controller Out Peripheral In
5	RESET	Internal	Reset
6	GND	Internal	Ground

13 Mounting Holes And Board Outline

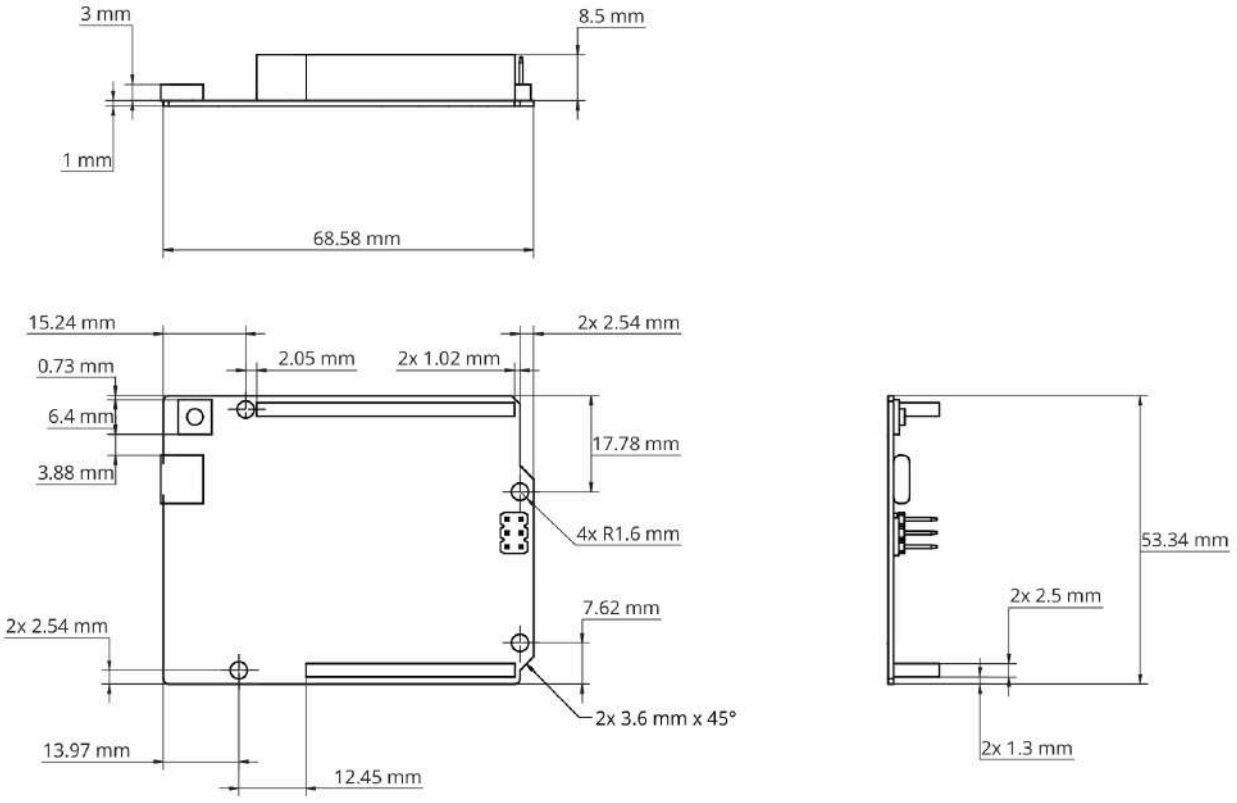

Top side Mechanical View of Arduino UNO R4 WiFi

14 Board Operation

14.1 Getting Started - IDE

If you want to program your UNO R4 WiFi while offline you need to install the Arduino® Desktop IDE **[1]**. To connect the UNO R4 WiFi to your computer, you will need a Type-C® USB cable, which can also provide power to the board, as indicated by the LED (DL1).

14.2 Getting Started - Arduino Cloud Editor

All Arduino boards, including this one, work out-of-the-box on the Arduino® Cloud Editor **[2]**, by just installing a simple plugin.

The Arduino Cloud Editor is hosted online, therefore it will always be up-to-date with the latest features and support for all boards. Follow **[3]** to start coding on the browser and upload your sketches onto your board.

14.3 Getting Started - Arduino Cloud

All Arduino IoT enabled products are supported on Arduino Cloud which allows you to log, graph and analyze sensor data, trigger events, and automate your home or business.

14.4 Online Resources

Now that you have gone through the basics of what you can do with the board you can explore the endless possibilities it provides by checking existing projects on Arduino Project Hub **[4]**, the Arduino Library Reference **[5]**, and the online store **[6]**; where you will be able to complement your board with sensors, actuators and more.

14.5 Board Recovery

All Arduino boards have a built-in bootloader which allows flashing the board via USB. In case a sketch locks up the processor and the board is not reachable anymore via USB, it is possible to enter bootloader mode by double-tapping the reset button right after the power-up.

Certifications

15 Declaration of Conformity CE DoC (EU)

We declare under our sole responsibility that the products above are in conformity with the essential requirements of the following EU Directives and therefore qualify for free movement within markets comprising the European Union (EU) and European Economic Area (EEA).

16 Declaration of Conformity to EU RoHS & REACH 211 01/19/2021

Arduino boards are in compliance with RoHS 2 Directive 2011/65/EU of the European Parliament and RoHS 3 Directive 2015/863/EU of the Council of 4 June 2015 on the restriction of the use of certain hazardous substances in electrical and electronic equipment.

Substance	Maximum Limit (ppm)
Lead (Pb)	1000
Cadmium (Cd)	100
Mercury (Hg)	1000
Hexavalent Chromium (Cr6+)	1000
Poly Brominated Biphenyls (PBB)	1000
Poly Brominated Diphenyl ethers (PBDE)	1000
Bis(2-Ethylhexyl} phthalate (DEHP)	1000
Benzyl butyl phthalate (BBP)	1000
Dibutyl phthalate (DBP)	1000
Diisobutyl phthalate (DIBP)	1000

Exemptions : No exemptions are claimed.

Arduino Boards are fully compliant with the related requirements of European Union Regulation (EC) 1907 /2006 concerning the Registration, Evaluation, Authorization and Restriction of Chemicals (REACH). We declare none of the SVHCs (https://echa.europa.eu/web/guest/candidate-list-table), the Candidate List of Substances of Very High Concern for authorization currently released by ECHA, is present in all products (and also package) in quantities totaling in a concentration equal or above 0.1%. To the best of our knowledge, we also declare that our products do not contain any of the substances listed on the "Authorization List" (Annex XIV of the REACH regulations) and Substances of Very High Concern (SVHC) in any significant amounts as specified by the Annex XVII of Candidate list published by ECHA (European Chemical Agency) 1907 /2006/EC.

17 Conflict Minerals Declaration

As a global supplier of electronic and electrical components, Arduino is aware of our obligations with regards to laws and regulations regarding Conflict Minerals, specifically the Dodd-Frank Wall Street Reform and Consumer Protection Act, Section 1502. Arduino does not directly source or process conflict minerals such as Tin, Tantalum, Tungsten, or Gold. Conflict minerals are contained in our products in the form of solder, or as a component in metal alloys. As part of our reasonable due diligence Arduino has contacted component suppliers within our supply chain to verify their continued compliance with the regulations. Based on the information received thus far we declare that our products contain Conflict Minerals sourced from conflict-free areas.

18 FCC Caution

Any Changes or modifications not expressly approved by the party responsible for compliance could void the user's authority to operate the equipment.

This device complies with part 15 of the FCC Rules. Operation is subject to the following two conditions:

(1) This device may not cause harmful interference

(2) this device must accept any interference received, including interference that may cause undesired operation.

FCC RF Radiation Exposure Statement:

1. This Transmitter must not be co-located or operating in conjunction with any other antenna or transmitter.
2. This equipment complies with RF radiation exposure limits set forth for an uncontrolled environment.
3. This equipment should be installed and operated with a minimum distance of 20 cm between the radiator & your body.

Note: This equipment has been tested and found to comply with the limits for a Class B digital device, pursuant to part 15 of the FCC Rules. These limits are designed to provide reasonable protection against harmful interference in a residential installation. This equipment generates, uses and can radiate radio frequency energy and, if not installed and used in accordance with the instructions, may cause harmful interference to radio communications. However, there is no guarantee that interference will not occur in a particular installation. If this equipment does cause harmful interference to radio or television reception, which can be determined by turning the equipment off and on, the user is encouraged to try to correct the interference by one or more of the following measures:

- Reorient or relocate the receiving antenna.
- Increase the separation between the equipment and receiver.
- Connect the equipment into an outlet on a circuit different from that to which the receiver is connected.
- Consult the dealer or an experienced radio/TV technician for help.

English: User manuals for licence-exempt radio apparatus shall contain the following or equivalent notice in a conspicuous location in the user manual or alternatively on the device or both. This device complies with Industry Canada licence-exempt RSS standard(s). Operation is subject to the following two conditions:

(1) this device may not cause interference

(2) this device must accept any interference, including interference that may cause undesired operation of the device.

French: Le présent appareil est conforme aux CNR d'Industrie Canada applicables aux appareils radio exempts de licence. L'exploitation est autorisée aux deux conditions suivantes :

(1) l' appareil nedoit pas produire de brouillage

(2) l'utilisateur de l'appareil doit accepter tout brouillage radioélectrique subi, même si le brouillage est susceptible d'en compromettre le fonctionnement.

IC SAR Warning:

English This equipment should be installed and operated with a minimum distance of 20 cm between the radiator and your body.

French: Lors de l' installation et de l' exploitation de ce dispositif, la distance entre le radiateur et le corps est d 'au moins 20 cm.

Important: The operating temperature of the EUT can't exceed 85 °C and shouldn't be lower than -40 °C.

Hereby, Arduino S.r.l. declares that this product is in compliance with essential requirements and other relevant provisions of Directive 2014/53/EU. This product is allowed to be used in all EU member states.

19 SRRC

This equipment contains a radio transmitter module with model approval code: CMIIT ID: 2022DP6085.

20 Company Information

Company name	**Arduino SRL**
Company Address	Via Andrea Appiani, 25 - 20900 MONZA (Italy)

21 Reference Documentation

Ref	Link
Arduino IDE (Desktop)	https://www.arduino.cc/en/Main/Software
Arduino IDE (Cloud)	https://create.arduino.cc/editor
Cloud IDE Getting Started	https://docs.arduino.cc/cloud/web-editor/tutorials/getting-started/getting-started-web-editor
Project Hub	https://create.arduino.cc/projecthub?by=part&part_id=11332&sort=trending
Library Reference	https://github.com/arduino-libraries/
Online Store	https://store.arduino.cc/

22 Change Log

Date	Revision	Changes
10/29/2025	8	Mechanical drawing update
09/04/2025	7	Fixed I2C information
05/09/2024	6	Cloud Editor updated from Web Editor
03/07/2024	5	Update Assets
19/09/2023	4	Update FCC section
25/07/2023	3	Update Pin Table
30/06/2023	2	Update Pinout File
08/06/2023	1	First Release

中文（ZH）

说明

Arduino® UNO R4 WiFi是首款配备32位微控制器和ESP32-S3 Wi-Fi® 模块 (ESP32-S3-MINI-1-N8) 的UNO板。它采用Renesas的RA4M1系列微控制器(R7FA4M1AB3CFM#AA0)，基于48 MHz Arm® Cortex®-M4 微处理器。UNO R4 WiFi的内存比前代产品大，有256 kB闪存、32 kB SRAM和8 kB EEPROM。

RA4M1的工作电压固定为5V，而ESP32-S3模块为3.3V。这两个MCU之间的通信通过逻辑电平转换器(TXB0108DQSR)执行。

目标领域：

创客、初学者、教育

特点

R7FA4M1AB3CFM#AA0 在本数据表中通常称为RA4M1,是UNO R4 WiFi上的主MCU，与电路板上的所有引脚头以及所有通信总线相连。

- **概述**
  - 48 MHz Arm® Cortex®-M4微处理器，带浮点运算单元 (FPU)
  - 5V工作电压
  - 实时时钟(RTC)
  - 内存保护单元(MPU)
  - 数模转换器(DAC)
- **内存**
  - 256kB 闪存
  - 32kB SRAM
  - 8kB 数据存储器（EEPROM）
- **外设**
  - 电容式触摸感应单元（CTSU）
  - USB 2.0 全速模块 (USBFS)
  - 14位ADC
  - 最高12位DAC
  - 运算放大器 (OPAMP)
- **电源**
  - RA4M1的工作电压为5V
  - 建议输入电压(VIN)为6-24 V
  - 桶形插孔连接至VIN引脚（6-24 V）
  - 通过USB-C®供电,电压为5V
- **通信**
  - 1个UART（引脚D0、D1）
  - 1个SPI（引脚D10-D13，ICSP针座）
  - 2个I2C（引脚A4、A5、SDA、SCL, (Qwiic connector)
  - 1个CAN（引脚D4、D5，需要外部收发器）

请通过以下链接查看 R7FA4M1AB3CFM#AA0 的完整数据表：

- R7FA4M1AB3CFM#AA0 数据表

ESP32-S3-MINI-1-N8 是二级MCU内置天线，用于Wi-Fi®和Bluetooth®连接。该模块工作电压为3.3V，通过逻辑电平转换器(TXB0108DQSR)与RA4M1通信。

- **概述**
  - Xtensa® 双核32位LX7微处理器
  - 3.3V工作电压
  - 40 MHz晶体振荡器
- **Wi-Fi®**
  - 支持802.11 b/g/n标准的Wi-Fi®（Wi-Fi® 4）
  - 比特率高达150 Mbps
  - 2.4千兆赫频段
- **蓝牙®**
  - 蓝牙® 5

请在下面的链接中查看 ESP32-S3-MINI-1-N8 的完整数据表：

- ESP32-S3-MINI-1-N8数据表

目录

23 开发板

23.1 应用示例

UNO R4 WiFi是第一代32位开发板的一部分, 之前基于8位AVR微控制器。关于UNO开发板有数千篇指南、教程和书籍，而UNO R4 WiFi延续了它的传统。

该开发板具有14个数字I/O端口，6个模拟通道，专用于 I2C、SPI 和 UART 连接的引脚。它具有更大的内存：闪存（256 kB）是之前的8倍，SRAM（32 kB）是之前的16倍。它的时钟速度为48 MHz，比之前的快3倍。

此外，它还具有ESP32-S3模块，用于Wi-Fi®和Bluetooth®连接，以及内置的 12x8 LED 矩阵，使其成为迄今为止最具视觉效果的 Arduino 开发板之一。LED 矩阵是完全可编程的，您可以加载从静态帧到自定义动画的任何内容。

入门级项目： 如果这是您在编码和电子方面的第一个项目，UNO R4 WiFi 是一个不错的选择。它易于上手，而且有很多在线文档。

简单的物联网应用：在 Arduino 云中构建项目，无需编写任何网络代码。监控您的开发板，将其与其他开发板和服务连接，并开发酷炫的物联网项目。

LED 矩阵：开发板上的 12x8 LED 矩阵可用于显示动画、文本滚动、创建小游戏等，是赋予您的项目更多个性的完美功能。

23.1.1 相关产品

- UNO R3
- UNO R3 SMD
- UNO R4 Minima

评分

24 建议的运行条件

符号	描述	最小值	典型值	最大值	单位
V_{IN}	VIN 引脚 / DC 插孔的输入电压	6	7.0	24	V
V_{USB}	USB 连接器的输入电压	4.8	5.0	5.5	V
T_{OP}	工作温度	-40	25	85	°C

注： V_{DD} 控制逻辑电平，并连接到5V电源轨。V_{AREF} 用于模拟逻辑。

功能概览

25 方框图

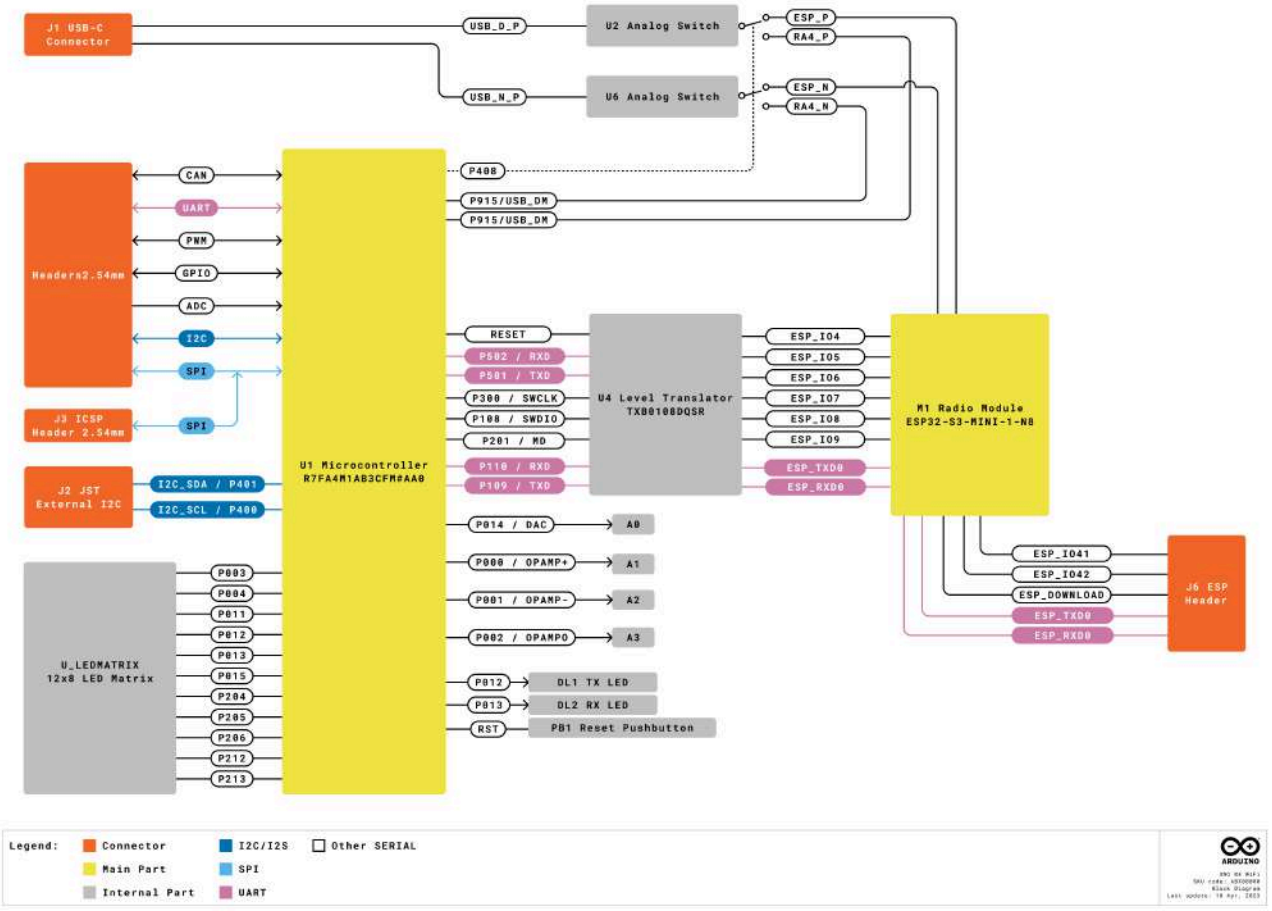

Arduino UNO R4 WiFi 框图

26 板卡拓扑

26.1 正视图

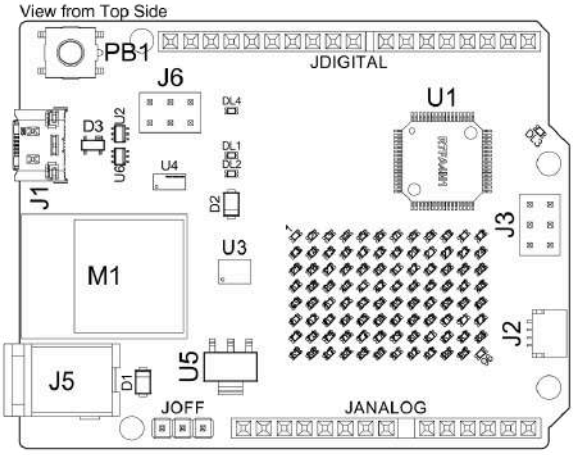

Arduino UNO R4 WiFi 的正视图

参考	描述
U1	R7FA4M1AB3CFM#AA0 微控制器 IC
U2	NLASB3157DFT2G 多路复用器
U3	ISL854102FRZ-T 降压转换器
U4	TXB0108DQSR 逻辑电平转换器（5 V - 3.3 V）
U5	SGM2205-3.3XKC3G/TR 3.3 V 线性稳压器
U6	NLASB3157DFT2G 多路复用器
U_LEDMATRIX	12x8 LED 红色矩阵
M1	ESP32-S3-MINI-1-N8
PB1	RESET 复位按钮
JANALOG	模拟输入/输出针脚
JDIGITAL	数字输入/输出针脚
JOFF	OFF, VRTC 针脚
J1	CX90B-16P USB-C® 连接器
J2	SM04B-SRSS-TB(LF)(SN) I2C 连接器
J3	ICSP 针脚（SPI）
J5	直流电源插孔
J6	ESP 针脚

参考	描述
DL1	LED TX（串行发送）
DL2	LED RX（串行接收）
DL3	LED 电源（绿色）
DL4	LED SCK （串行时钟）
D1	PMEG6020AELRX 肖特基二极管二极管
D2	PMEG6020AELRX 肖特基二极管二极管
D3	PRTR5V0U2X,215 ESD 保护

27 微控制器 （R7FA4M1AB3CFM#AA0）

UNO R4 WiFi 基于Renesas的32位RA4M1系列微控制器**R7FA4M1AB3CFM#AA0**，它使用了一个48 MHz的Arm® Cortex®-M4微处理器，带有浮点运算单元 (FPU)。

RA4M1的工作电压固定为5 V，以便与基于之前的Arduino UNO板的屏蔽板、配件和电路兼容。

R7FA4M1AB3CFM#AA0的特点有：

- 256kB 闪存/32kB SRAM/8kB 数据闪存（EEPROM）
- 实时时钟 (RTC)
- 4x直接内存访问控制器 (DMAC)
- 14位ADC
- 最高12位DAC
- 运算放大器
- CAN总线

有关该微控制器的更多技术细节，请访问Renesas-RA4M1系列官方文档。

28 Wi-Fi® / 蓝牙® 模块（ESP32-S3-MINI-1-N8）

UNO R4 WiFi上的Wi-Fi®/蓝牙® LE模块来自ESP32-S3 SoC。它采用Xtensa® 双核32位LX7 MCU，内置天线，支持2.4 GHz频段。

ESP32-S3-MINI-1-N8的特点有：

- Wi-Fi® 4 - 2.4 GHz频段
- 支持蓝牙® 5 LE
- 3.3V 工作电压
- 384kB ROM
- 512kB SRAM
- 最高150 Mbps比特率

这个模块充当了UNO R4 WiFi上的次级MCU，并使用逻辑电平转换器与RA4M1 MCU通信。请注意，这个模块的工作电压是3.3 V，而不是RA4M1的5V工作电压。

28.1 ESP 针脚

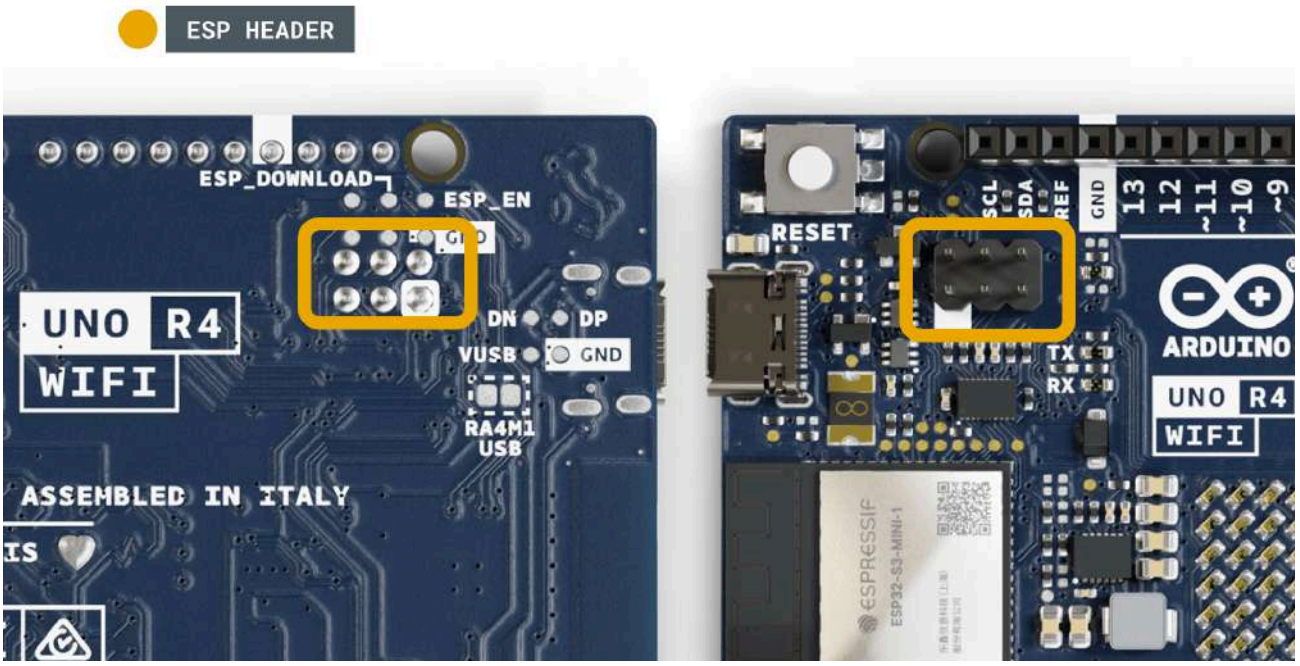

ESP针脚.

靠近RESET按钮的针座可用于直接访问ESP32-S3模块。可访问的引脚有

- ESP_IO42 - MTMS 调试（引脚 1）
- ESP_IO41 - MTDI 调试（引脚 2）
- ESP_TXD0 - 串行传输（UART）（引脚 3）
- ESP_DOWNLOAD - 启动（引脚 4）
- ESP_RXD0-串行接收（UART）（引脚 5）
- GND - 接地（引脚 6）

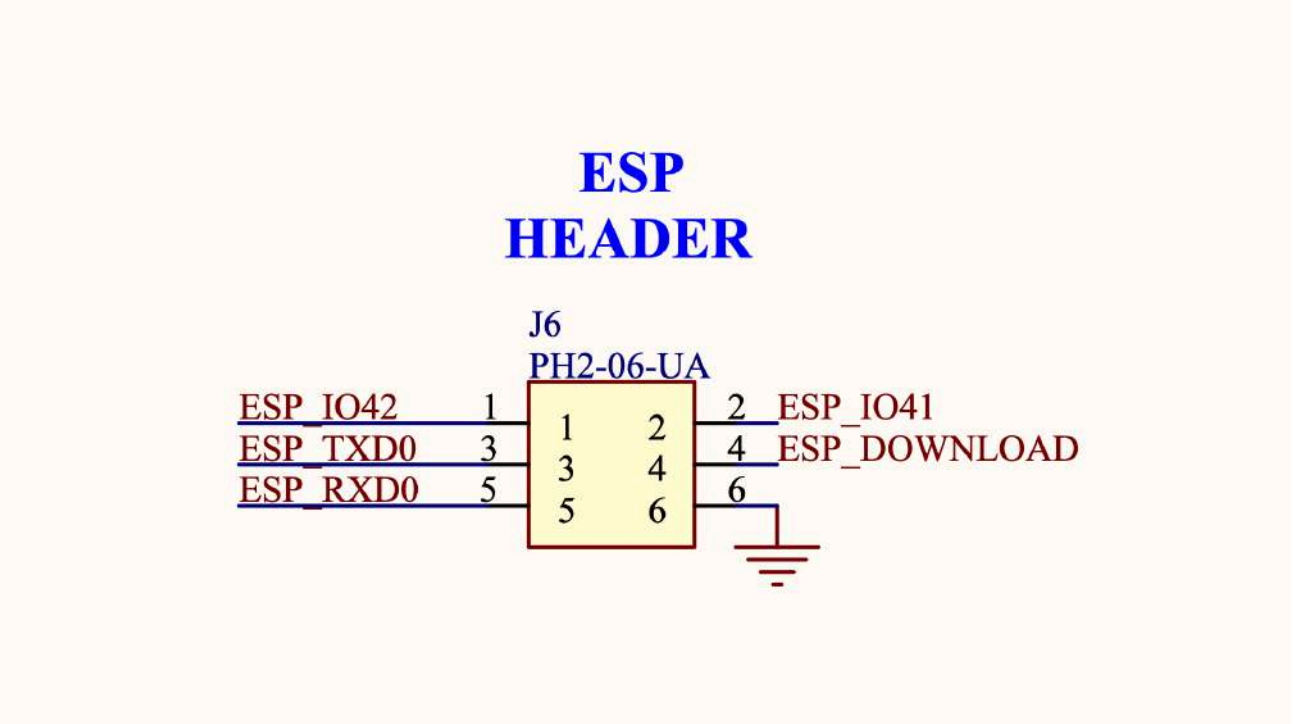

ESP 针脚（原理图

28.2 USB 桥

对UNO R4 WiFi进行编程时，RA4M1 MCU默认通过ESP32-S3模块进行编程。通过向"P408 "引脚(D40)写入高电平状态，**U2** 和 **U6** 开关可将USB通信直接切换到RA4M1 MCU。

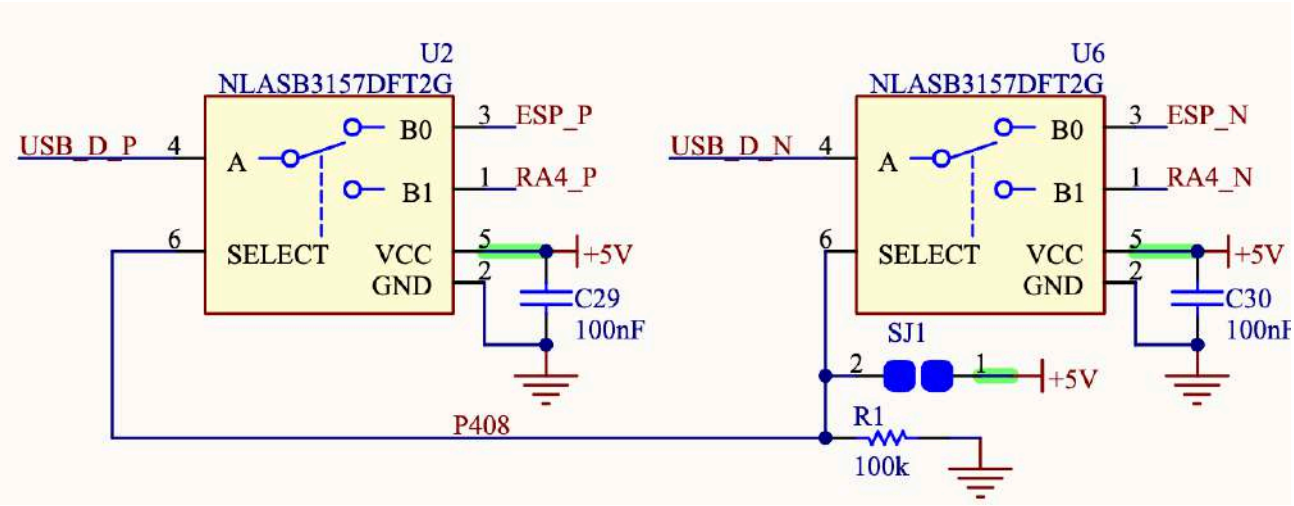

将**SJ1**焊盘焊接在一起可永久性地将USB通信直接设置为RA4M1，绕过ESP32-S3。

29 USB 连接器

UNO R4 WiFi有一个USB-C® 端口，用于开发板供电和编程，以及发送和接收串行通信。

注意： 通过USB-C® 端口为开发板供电的电压不得超过5V。

30 LED 矩阵

UNO R4 WiFi采用12x8的红色LED矩阵(**U_LEDMATRIX**)，使用一种称为查理普莱克斯法的技术连接。

RA4M1 MCU上用于矩阵的引脚有：

- P003
- P004
- P011
- P012
- P013
- P015
- P204
- P205
- P206
- P212
- P213

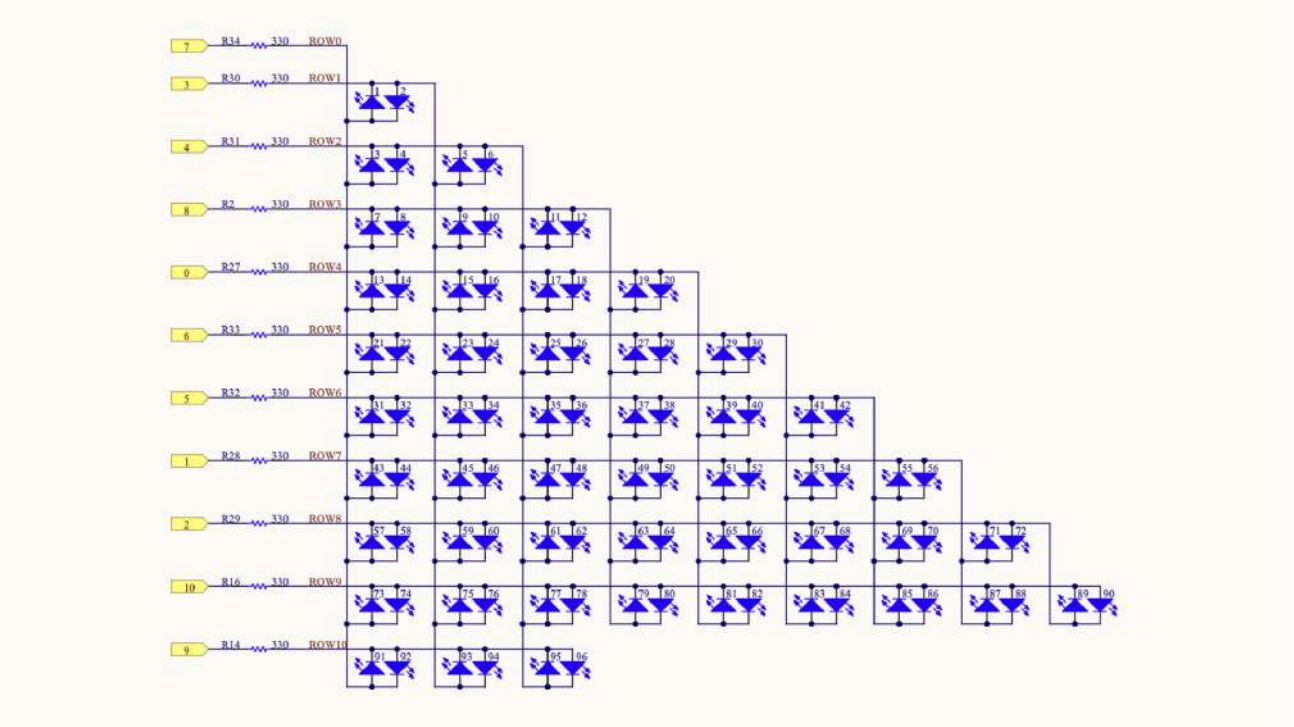

LED矩阵示意图

这些LED可以通过特定库以数组形式访问。请参阅下面的映射：

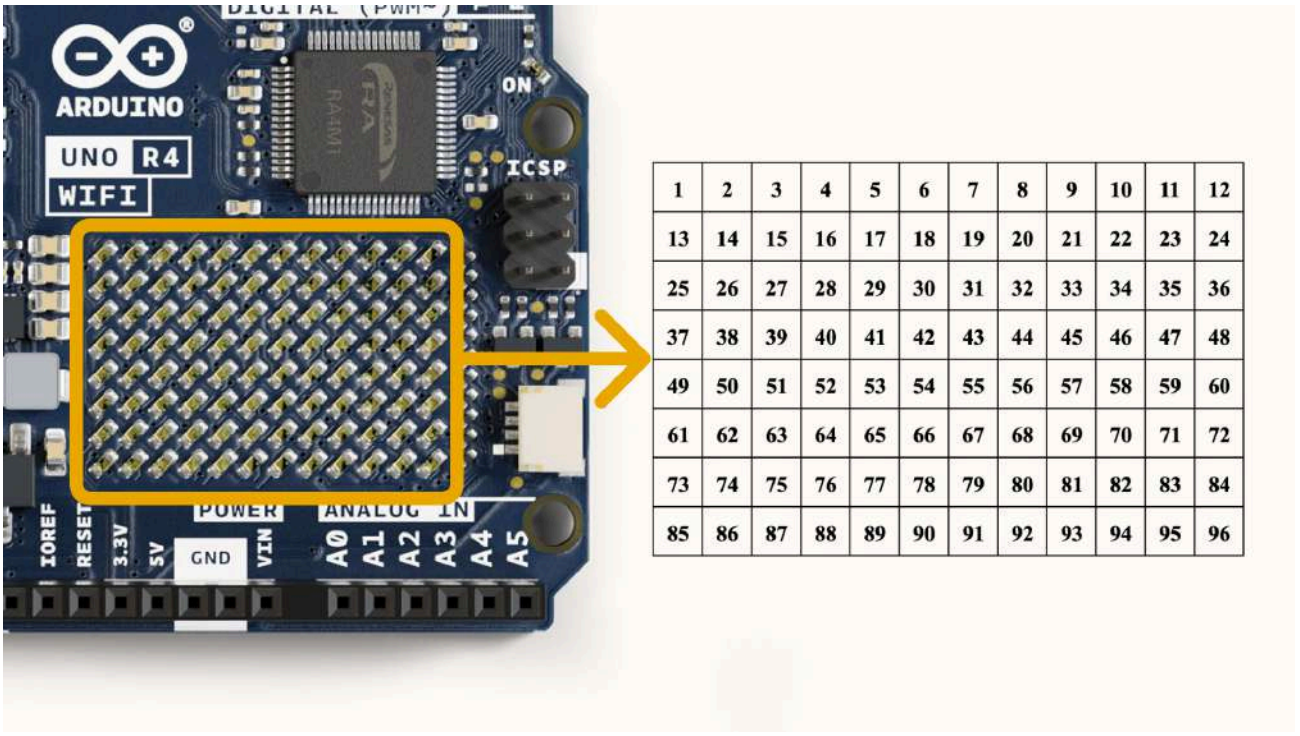

1	2	3	4	5	6	7	8	9	10	11	12
13	14	15	16	17	18	19	20	21	22	23	24
25	26	27	28	29	30	31	32	33	34	35	36
37	38	39	40	41	42	43	44	45	46	47	48
49	50	51	52	53	54	55	56	57	58	59	60
61	62	63	64	65	66	67	68	69	70	71	72
73	74	75	76	77	78	79	80	81	82	83	84
85	86	87	88	89	90	91	92	93	94	95	96

LED矩阵编号映射

该矩阵可用于多个项目和原型设计，支持动画、简单的游戏设计和滚动文本等。

31 数字模拟转换器 （DAC）

UNO R4 WiFi的A0模拟引脚连接了一个分辨率高达12位的DAC。DAC用于将数字信号转换为模拟信号。

DAC可用于音频应用中的信号生成，如生成和改变锯齿波。

32 I2C 连接器

I2C连接器SM04B-SRSS-TB(LF)(SN)连接到开发板上的一个次级I2C总线。请注意，该连接器通过3.3V供电。

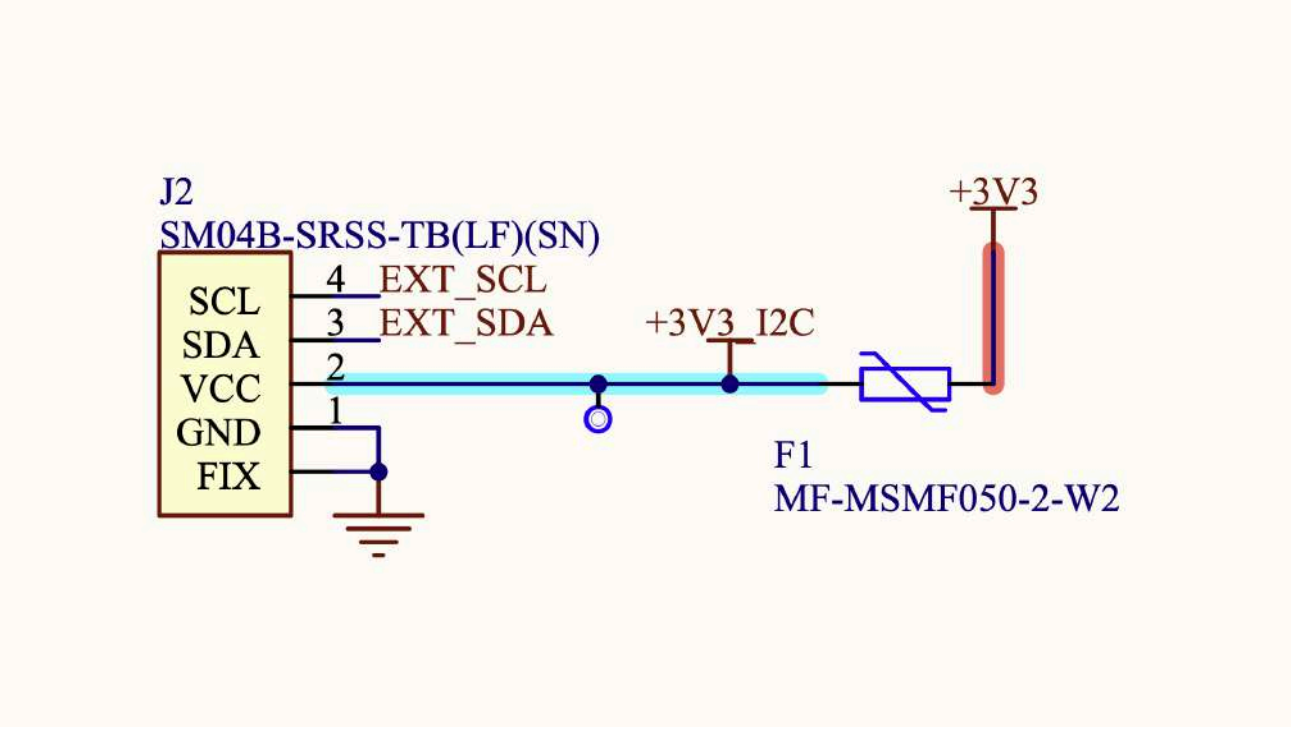

I2C连接器.

该连接器还共享以下引脚连接：

JANALOG 针脚

- A4
- A5

JDIGITAL 针脚

- SDA
- SCL

注意： 由于A4/A5连接到主I2C总线，因此在使用总线时，不应将这些引脚用作ADC输入。不过，您可以同时将I2C设备连接到这些引脚和连接器上。

33 电源选项

电源可通过VIN引脚或USB-C®连接器提供。如果通过VIN供电，ISL854102FRZ降压转换器会将电压降到5V。

VUSB和VIN引脚均连接至ISL854102FRZ降压转换器，并分别安装了肖特基二极管，用于极性反接和过压保护。

通过USB向RA4M1 MCU供电约 ~4.7V（由于肖特基电压降）。

线性稳压器（SGM2205-3.3XKC3G/TR）转换来自降压转换器或USB的5V电压，并为包括ESP32-S3模块在内的多个组件提供3.3V电压。

33.1 电源树

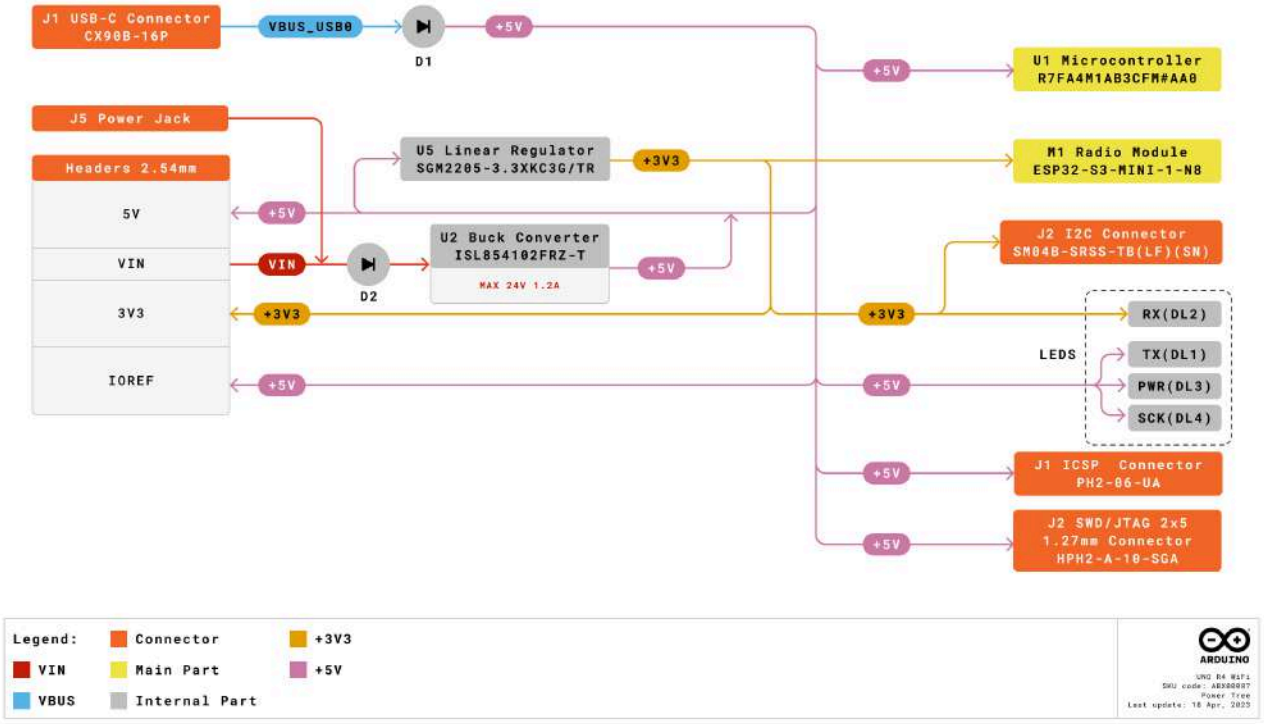

Arduino UNO R4 WiFi电源树.

33.2 引脚电压

UNO R4 WiFi的一般工作电压为5V，但ESP32-S3模块的工作电压为3.3V。

注意： ESP32-S3的引脚（3.3 V）不得与RA4M1的任何引脚（5V）接触，否则可能损坏电路，这一点非常重要。

33.3 引脚电流

R7FA4M1AB3CFM#AA0微控制器上的GPIO可安全处理高达8mA的电流。切勿将电流更大的设备直接连接到GPIO，否则可能会损坏电路。

为伺服电机等供电时，请务必使用外部电源。

机械信息

34 引脚

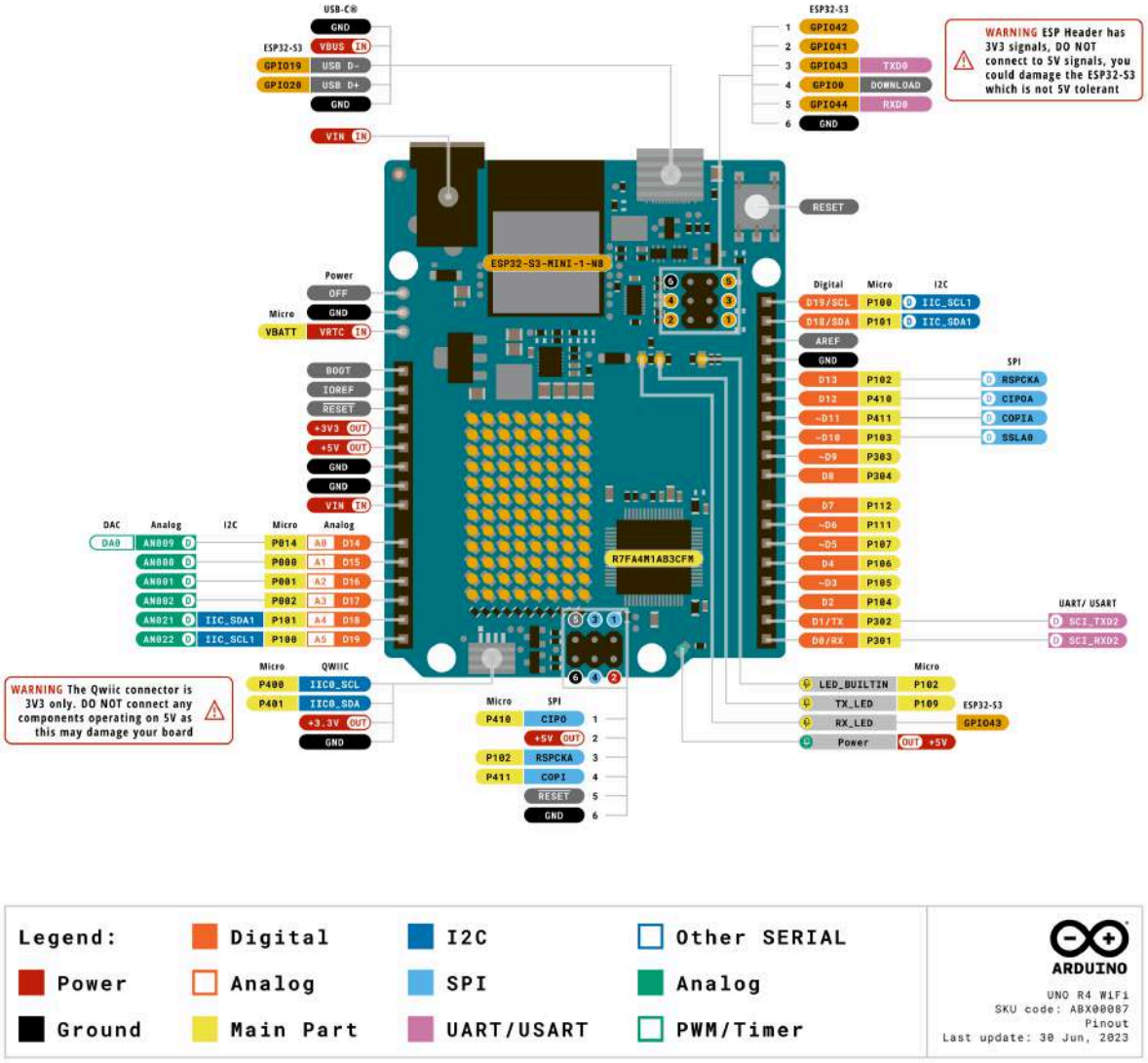

UNO R4 WiFi 的引脚输出

34.1 模拟

针脚	功能	类型	描述
1	BOOT	NC	未连接
2	IOREF	IOREF	数字逻辑参考电压 V - 连接至 5 V
3	Reset	Reset	复位
4	+3V3	电源	+3V3 电源轨
5	+5V	电源	+5V 电源轨
6	GND	电源	接地
7	GND	电源	接地
8	VIN	电源	电压输入
9	A0	模擬信號	模拟输入 0 / DAC
10	A1	模擬信號	模拟输入 1 / OPAMP+
11	A2	模擬信號	模拟输入 2 / OPAMP-
12	A3	模擬信號	模拟输入 3 / OPAMPOut
13	A4	模擬信號	模拟输入 4 / I2C 串行数据（SDA）
14	A5	模擬信號	模拟输入 5 / I2C 串行时钟 (SCL)

34.2 数字

引脚	功能	类型	描述
1	SCL	数字	I2C 串行时钟（SCL）
2	SDA	数字	I2C 串行数据（SDA）
3	AREF	数字	模拟参考电压
4	GND	电源	接地
5	D13/SCK/CANRX0	数字	GPIO 13 / SPI 时钟 / CAN 接收器 (RX)
6	D12/CIPO	数字	GPIO 12 / SPI 控制器输入外设输出
7	D11/COPI	数字	GPIO 11（PWM）/ SPI 控制器输出外设输入
8	D10/CS/CANTX0	数字	GPIO 10（PWM）/ SPI 芯片选择/CAN 发射器（TX）
9	D9	数字	GPIO 9 (PWM~)
10	D8	数字	GPIO 8
11	D7	数字	GPIO 7
12	D6	数字	GPIO 6 (PWM~)
13	D5	数字	GPIO 5 (PWM~)
14	D4	数字	GPIO 4
15	D3	数字	GPIO 3 (PWM~) / 中断引脚
16	D2	数字	GPIO 2 / 中断引脚
17	D1/TX0	数字	GPIO 1 / 串行 0 发送器（TX）
18	D0/TX0	数字	GPIO 0 / 串行 0 接收器 (RX)

34.3 关闭

引脚	功能	类型	描述
1	OFF	电源	用于控制电源
2	GND	电源	接地
1	VRTC	电源	电池连接，仅为 RTC 供电

34.4 ICSP

引脚	功能	类型	描述
1	CIPO	内部	控制器输入外设输出
2	+5V	内部	5V 电源
3	SCK	内部	串行时钟
4	COPI	内部	控制器输出外设输入
5	RESET	内部	复位
6	GND	内部	接地

35 安装孔和开发板轮廓

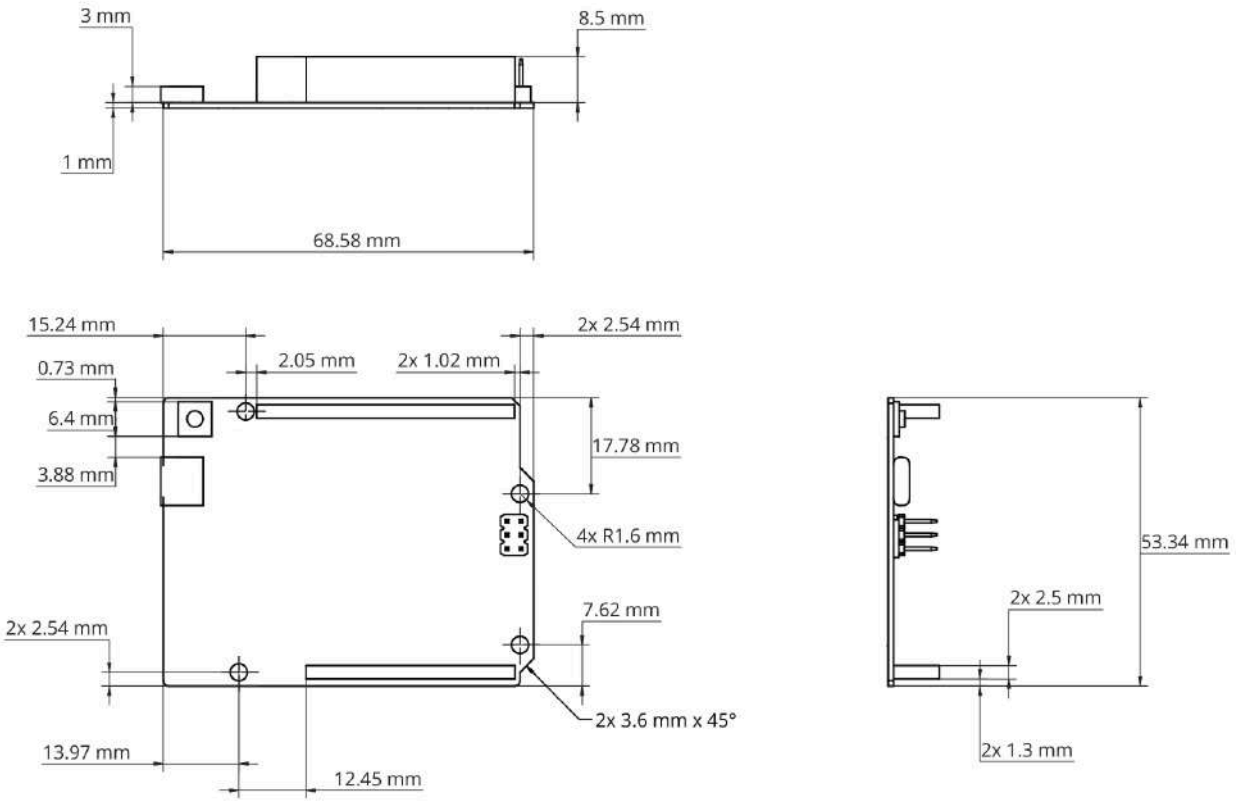

Arduino UNO R4 WiFi 的顶部机械视图

36 开发板操作

36.1 入门 - IDE

如果您想在离线状态下对UNO R4 WiFi进行编程，则需要安装Arduino® Desktop IDE **[1]**。要将UNO R4 WiFi连接到计算机，您需要使用Type-C® USB电缆，该电缆还可为开发板供电，LED 指示灯 (DL1) 即可显示。

36.2 入门 - Arduino Cloud Editor

只需安装一个简单的插件，包括本板在内的所有Arduino板都能在Arduino® Cloud Editor **[2]**上即插即用。

Arduino Cloud Editor是在线托管的，因此它总是与最新的功能和对所有板的支持保持同步。按照 **[3]** 开始在浏览器上编码，并将草图上传到开发板上。

36.3 入门 - Arduino Cloud

Arduino Cloud支持所有支持Arduino IoT的产品，让您可以记录、绘制和分析传感器数据，触发事件，实现家庭或企业自动化。

36.4 在线资源

既然您已经了解了使用开发板的基本知识，那么就可以通过查看 Arduino Project Hub **[4]**、Arduino Library Reference **[5]**和在线商店 **[6]**上的现有项目来探索它所提供的无限可能；在那里您可以用传感器、致动器等对开发板进行补充。

36.5 开发板恢复

所有Arduino板都有一个内置引导加载程序，可以通过 USB 对板进行刷新。如果某个草图锁定了处理器，并且无法再通过 USB 连接开发板，则可以在上电后双击复位按钮进入引导加载程序模式。

认证

37 符合性声明 CE DoC（EU）

我们郑重声明，上述产品符合以下欧盟指令的基本要求，因此有资格在欧盟（EU）和欧洲经济区（EEA）市场内自由流通。

38 符合性声明 EU RoHS & REACH 211 01/19/2021

Arduino开发板符合欧洲议会的RoHS 2指令2011/65/EU和欧盟理事会于2015年6月4日颁布的RoHS 3指令2015/863/EU，这些指令限制了在电气和电子设备中使用某些有害物质。

物质	最高限值（ppm)
铅 (Pb)	1000
镉 (Cd)	100
汞 (Hg)	1000
六价铬 (Cr6+)	1000
多溴联苯 (PBB)	1000
多溴联苯醚 (PBDE)	1000
邻苯二甲酸二（2-乙基己基）酯 (DEHP)	1000
邻苯二甲酸丁苄酯 (BBP)	1000
邻苯二甲酸二丁酯 (DBP)	1000
邻苯二甲酸二异丁酯 (DIBP)	1000

豁免： 未申请豁免。

Arduino开发板完全符合欧盟法规 (EC) 1907 /2006 中关于化学品注册、评估、许可和限制 (REACH) 的相关要求。我们声明，在所有产品（以及包装）中，没有任何 SVHCs (https://echa.europa.eu/web/guest/candidate-list-table)（欧洲化学品管理局目前发布的《高度关注物质候选授权清单》）的总浓度等于或超过0.1%。我们还声明，我们的产品不含 "授权清单"（REACH 法规附件 XIV）中列出的任何物质，也不含 ECHA（欧洲化学品管理局）1907 /2006/EC 公布的候选清单附件 XVII 中规定的高关注度物质 (SVHC)。

39 冲突矿物声明

作为电子和电气元件的全球供应商，Arduino知道我们有义务遵守有关冲突矿产的法律法规，特别是《多德-弗兰克华尔街改革和消费者保护法案》第1502条。Arduino不直接采购或加工锡、钽、钨或金等冲突矿物。冲突矿物以焊料的形式存在于我们的产品中，或作为金属合金的组成部分。作为我们合理尽职调查的一部分，Arduino已经联系了我们供应链中的组件供应商，以核实他们是否继续遵守相关规定。根据迄今为止收到的信息，我们声明我们的产品包含来自无冲突地区的冲突矿物。

40 FCC 注意事项

任何未经负责合规的一方明确批准的更改或修改都可能使用户操作设备的权限无效。

本设备符合 FCC 规则第 15 部分的规定。操作须符合以下两个条件：

(1) 本设备不得造成有害干扰

(2) 本设备必须接受任何接收到的干扰，包括可能导致意外运行的干扰。

FCC射频辐射暴露声明：

1.本发射机不得与任何其他天线或发射机共置或一起运行。

2.本设备符合为不受控环境规定的射频辐射暴露限值。

3.安装和操作本设备时，散热器与身体之间的距离至少应为 20 厘米。

注： 本设备已经过测试，符合FCC规则第15部分规定的B类数字设备的限制。这些限制旨在为居住安装提供合理的防止有害干扰的保护。本设备产生、使用和可以辐射射频能量，如果不按照说明书安装和使用，可能会对无线电通信造成有害干扰。但是，不能保证在特定安装中不会发生干扰。如果本设备对无线电或电视接收造成有害干扰，可以通过开关设备来确定，用户应尝试通过以下一种或多种措施来纠正干扰：

- 调整接收天线的方向或位置。
- 增加设备与接收器之间的距离。
- 将设备连接到与接收器连接的电路不同的插座上
- 向经销商或有经验的无线电/电视技术人员寻求帮助。

English: User manuals for licence-exempt radio apparatus shall contain the following or equivalent notice in a conspicuous location in the user manual or alternatively on the device or both. This device complies with Industry Canada licence-exempt RSS standard(s). Operation is subject to the following two conditions:

(1) this device may not cause interference

(2) this device must accept any interference, including interference that may cause undesired operation of the device.

French: Le présent appareil est conforme aux CNR d’Industrie Canada applicables aux appareils radio exempts de licence. L’exploitation est autorisée aux deux conditions suivantes :

(1) l’ appareil nedoit pas produire de brouillage

(2) l’utilisateur de l’appareil doit accepter tout brouillage radioélectrique subi, même si le brouillage est susceptible d’en compromettre le fonctionnement.

IC SAR 警告：

English This equipment should be installed and operated with a minimum distance of 20 cm between the radiator and your body.

French： Lors de l' installation et de l' exploitation de ce dispositif, la distance entre le radiateur et le corps est d 'au moins 20 cm.

注意事项： EUT的工作温度不能超过85°C，也不应低于-40°C。

Arduino S.r.l.特此声明，本产品符合欧盟指令 2014/53/EU 的基本要求和其他相关规定。本产品可在所有欧盟成员国使用。

41 SRRC

本设备包含型号核准代码为：CMIIT ID: 2022DP6085的无线电发射模块

42 公司信息

公司名称	Arduino SRL
公司地址	Via Andrea Appiani, 25 - 20900 MONZA（Italy)

43 参考文件

Ref	Link
Arduino IDE (Desktop)	https://www.arduino.cc/en/Main/Software
Arduino IDE (Cloud)	https://create.arduino.cc/editor
Cloud IDE Getting Started	https://docs.arduino.cc/cloud/web-editor/tutorials/getting-started/getting-started-web-editor
Project Hub	https://create.arduino.cc/projecthub?by=part&part_id=11332&sort=trending
Library Reference	https://github.com/arduino-libraries/
Online Store	https://store.arduino.cc/

44 更改日志

日期	** 修订版 **	变更内容
05/09/2024	6	从web编辑器更新为云编辑器
03/07/2024	5	一般更新
19/09/2023	4	更新 FCC 部分
25/07/2023	3	更新引脚表
30/06/2023	2	更新引脚文件
08/06/2023	1	首次发布