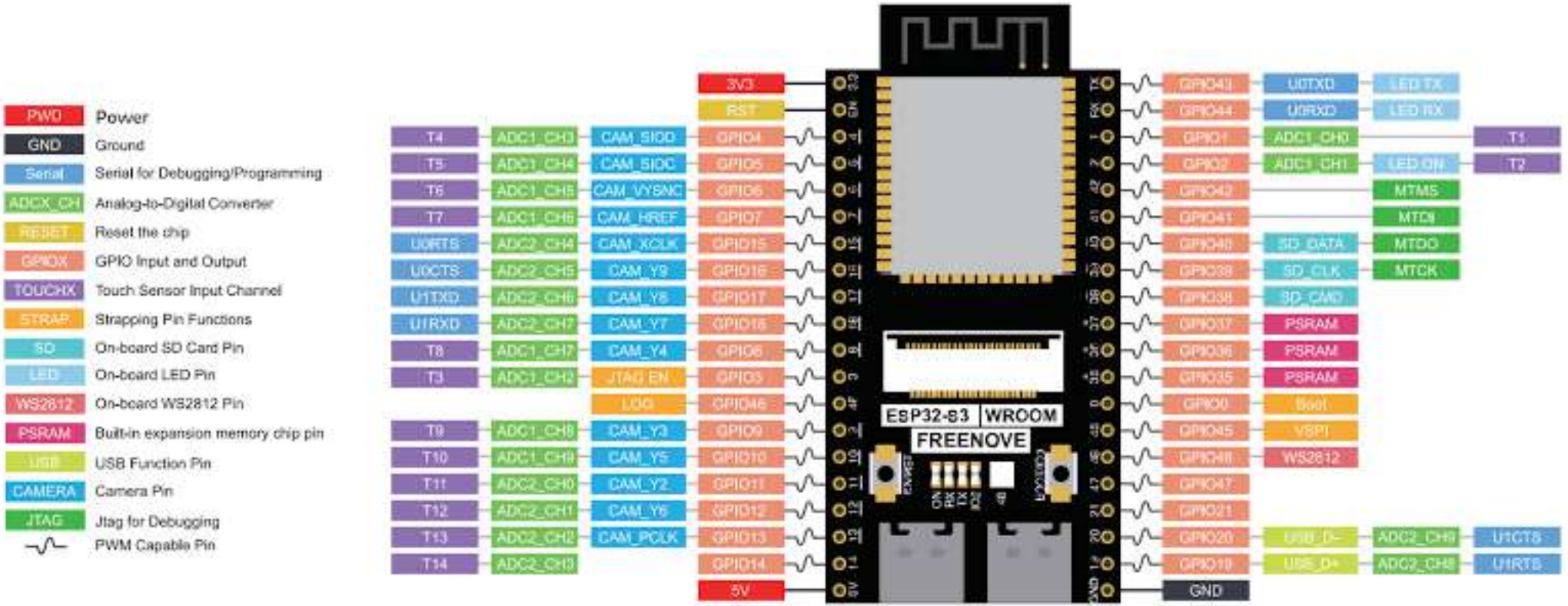ESP32-S3 WROOM Pinout