UNI-T®

UT312

Operating Manual

UNI-TREND INTERNATIONAL LTD
ISO 9001
Certificate No. 956661

Pocketable Vibrometer

P/N:110401103773

I.INTRODUCTION TO UT312 PRODUCT

UT-312 vibration meter is a split portable vibration measurer which consists of acceleration sensor and digital measurement display circuit. It is mainly used to measure vibration displacement, speed (or intensity) and acceleration of mechanical equipment. Current status (such as excellence, notice or danger) can be determined for equipment (such as fan, pump, compressor and motor, etc) by above measuring data according to enterprise & machine standards by comparing with national metrological verification regulations of JJG 676-2000 working vibration meter.

Such instrument has measuring value locking, low-voltage prompt and automatic shutdown functions. With advantages such as wide measurement scope, simple operation and convenient carrying, it can be used for patrol detection of equipment vibration in power, metallurgic and petrochemical industries widely so it is an ideal tally instrument.

Working principle:

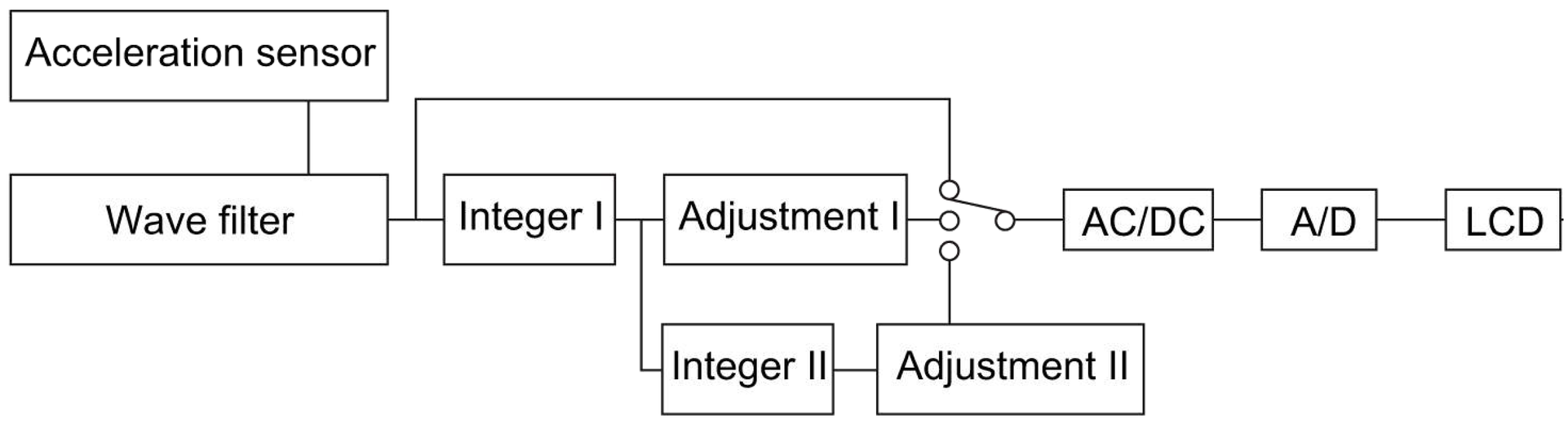

II.UNPACKING INSPECTION

Please unpack and check if following items are deficient or damaged or not. Please contact the nearest sales service agent of our company if there is any deficiency or damage.

1. Host----------1set
2. Sensor (with magnetic base)----------1 (standard) pcs assembled to host
3. Signal wire of sensor----------1 (standard) wire assembled to host
4. Hanging rope----------1 (standard) wire assembled to host
5. 9V battery----------1 section
6. Manual----------1 book
7. Certificate----------1 sheet

III.SAFETY NOTICES

Warning: Please pay attention to possible danger and conditions for user or damage factors for vibration meter!

Please use vibration meter according to steps shown in the manual or it may be damaged. Please abide by following guidelines to avoid instrument damage.

- To check if shell is ruptured or lacks of plastic pieces or not before using vibration meter. Please do not use vibration meter with damaged shell.
- Please replace battery as soon as possible to avoid error of measuring data if battery symbol of “ [- +] ” appears.
- Please do not continue to use vibration meter which operates abnormally. Please send it to fixed repair agent of our company for repair.
- Please do not use vibration meter in wet environment with combustible and explosive gas.

- Please do not detach shell of vibration meter to avoid damage.
- Please do not try to charge battery to avoid personal injury due to battery explosion. Please pay attention to “+” and “-” poles during battery installation.
- Please pay attention to protect LCD of vibration meter to avoid scratch or crush.

IV.INSTRUMENT STRUCTURE

1. Instrument structure (shown in Figure 1 and Form 1)

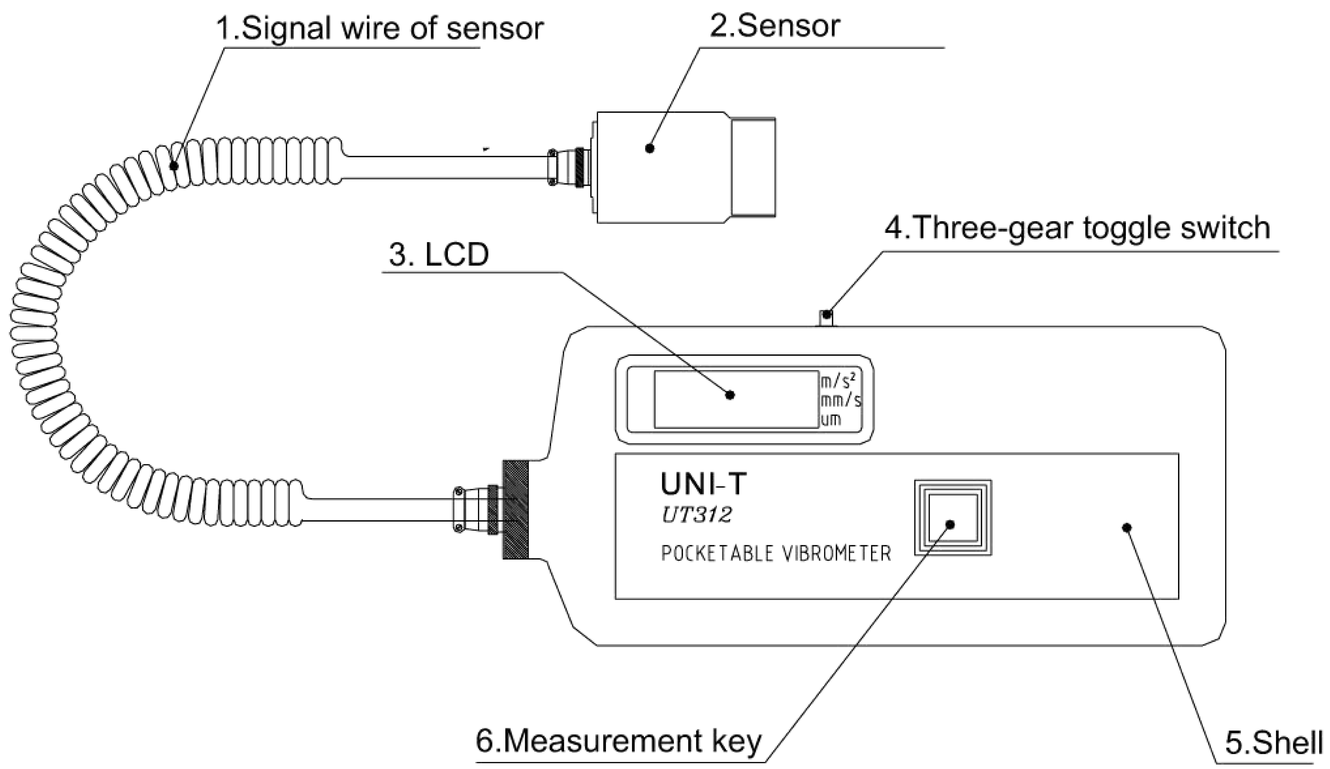

1	signal wire of sensor	4	three-gear toggle switch
2	sensor	5	shell
3	LCD	6	measurement key

2. Symbol (shown in Figure 2 and Form 2)

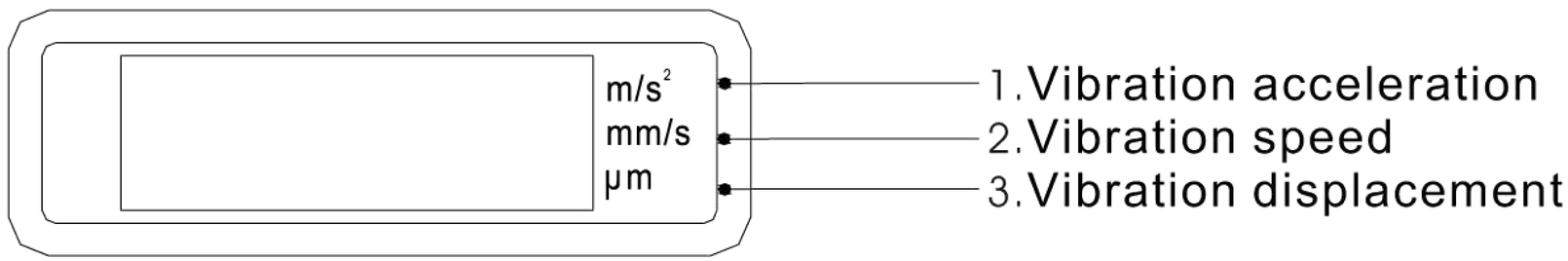

1	m/s²	Vibration acceleration
2	mm/s	Vibration speed
3	μm	Vibration displacement

3. Key instructions (shown in Figure 1)
   The 5th element shown in Figure 1: Measurement key button

V.INSTRUMENT SETUP AND OPERATION

1.Battery installation
   Please open cell box on the instrument back and then install 6F22 type 9V laminated cell into cell box. Please pay attention to polarity then cover it.

2.Power Inspection

Please press measurement key and observe display. Battery replacement mark in the left end of display shows low battery voltage and prompt of battery replacement. No mark refers to normal voltage for measurement. (Machine will power off automatically 1 minute after loosening the key.)

3.Selection of measurement mode

Please toggle measurement selection switch of vibration meter to select measurement acceleration, speed or displacement. Right arrow on display will point to selected measurement unit.

4.Measurement

Please connect signal wires connected to sensor to input connector of left sensor then absorb sensor with magnetic base to vertical cross section of measured article during usage for the 1st time. Instrument can enter into measurement status instantly by pressing measurement key by thumb. Measuring value will be maintained after loosening the key. Measurement also can be continued by pressing measurement key again. Data will be maintained for 1 minute after loosening the key and instrument will power off automatically at the same time. (Note: Please tighten clasp when connecting signal wires and hold instrument and sensor in hands after measurement. It is not allowed to hoist sensor by signal wires to avoid influence to service life of such wires.)

VI.TECHNICAL INDICATORS

1. General Specification

- LCD display: 3 1/2-bit display; The maximum display: 1999
- Under-voltage display:
- Sensor type: Acceleration sensor
- Power demand: 1 6F22 9V carbon or alkali battery
- Service life: To operate for more than 20 hours continuously
- Outline dimension: 185 (H) * 68 (W) * 0 (D) mm (for host)
- Weight: About 300g (including battery)

2.Environment Limitation

- Indoor usage
- Safety standard: GB 4793, 1-2007
- Pollution level: Grade 2
- Operation temperature & humidity: 0℃~40℃ (not more than 90%RH)
- Storage temperature & humidity: 0℃~+40℃ (not more than 80%RH)
- Atmospheric pressure: 75~106KPa

3.Technical Specification

- Accuracy: ±5% of 1 word (% of reading + word quantity); Correction period is 1 year;
- Ambient temperature: 0℃~40℃
- Ambient humidity: ≤80% RH
- Temperature coefficient: 0.1*(accuracy)/℃

Vibration measurement scope

Measurement unit	Vibration acceleration (O-P)	Vibration speed (RMS)	Vibration displacement (P-P)
Range	0.1～199.9m/s^2	0.1～199.9mm/s	1～1999μm
Frequency response scope and amplitude error	10～1500Hz ≤±5%	10～1500Hz ≤±5%	10～500Hz ≤±5%
Linear error of amplitude	0~2.0m/s^2, ≤±10% >2.0m/s^2, ≤±5%	0~2.0mm/s, ≤±10% >2.0mm/s, ≤±5%	0~20μm, ≤±10% >20μm ≤±5%

VII.MAINTENANCE

Warning: It is not allowed to scratch LCD of vibration meter during battery replacement and measurement to avoid damage or influence to measurement precision. It is also not allowed to charge replaced battery to avoid personal injury due to explosion!

1. Battery installation and replacement

- Be sure to replace battery in a timely manner when symbol of “ ” appears for vibration meter. Battery replacement method is as follows:
- Removing cell cover: Please replace 6F22 9V battery by the same model. Please do not install improper battery.
  Please pay attention to “+” and “-” polarity during battery installation.
- Please install cell cover after installation.

2. General Maintenance

- Please inspect signal wires of sensor constantly because instrument may not display due to damage or poor contact of such wires. It is not allowed to pull or drag signal wires forcefully.
- Sensor core is closed completely. It can not be detached except sensor signals.
- Please clean dirty instrument shell by wet cloth and neutral detergent. Please do not use abrasive or solvent.
- Please send damaged vibration meter to fixed repair agent or professional repair personnel of our company if required. Please do not try to repair it individually.
- Please do not scratch or contaminate LCD of vibration meter during usage to avoid oil stain, water leakage, damage or influence to it.
- Please take battery out if it will not be used for a long time.
- Please do not store instruments in wet environment and strong magnetic field under high temperature.

3.Common Troubleshooting

Common troubles	Possible reason
No bootstrap	Poor battery contact
Without signal input	Broken signal wire
Display of double arrows by gear switchover	Poor toggle of toggle switch
Tripping display or system halted	Broken toggle switch or poor toggle

UNI-T®

UT312 OPERATING MANUAL

The Operating Manual will change without notice!

UT312 OPERATING MANUAL

©Copyright 2011 Uni-Trend Group Limited.
All rights reserved.

Manufacturer:
Uni-Trend Technology (China) Limited
No 6, Gong Ye Bei 1st Road
Songshan Lake National High-Tech Industrial
Development Zone, Dongguan City
Guangdong Province
China
Postal Code:523 808

Headquarters:
Uni-Trend Group Limited
Rm901, 9/F, Nanyang Plaza
57 Hung To Road
Kwun Tong
Kowloon, Hong Kong
Tel: (852) 2950 9168
Fax: (852) 2950 9303
Email: info@uni-trend.com
http://www.uni-trend.com